8. 3 级维修

8-1.框图

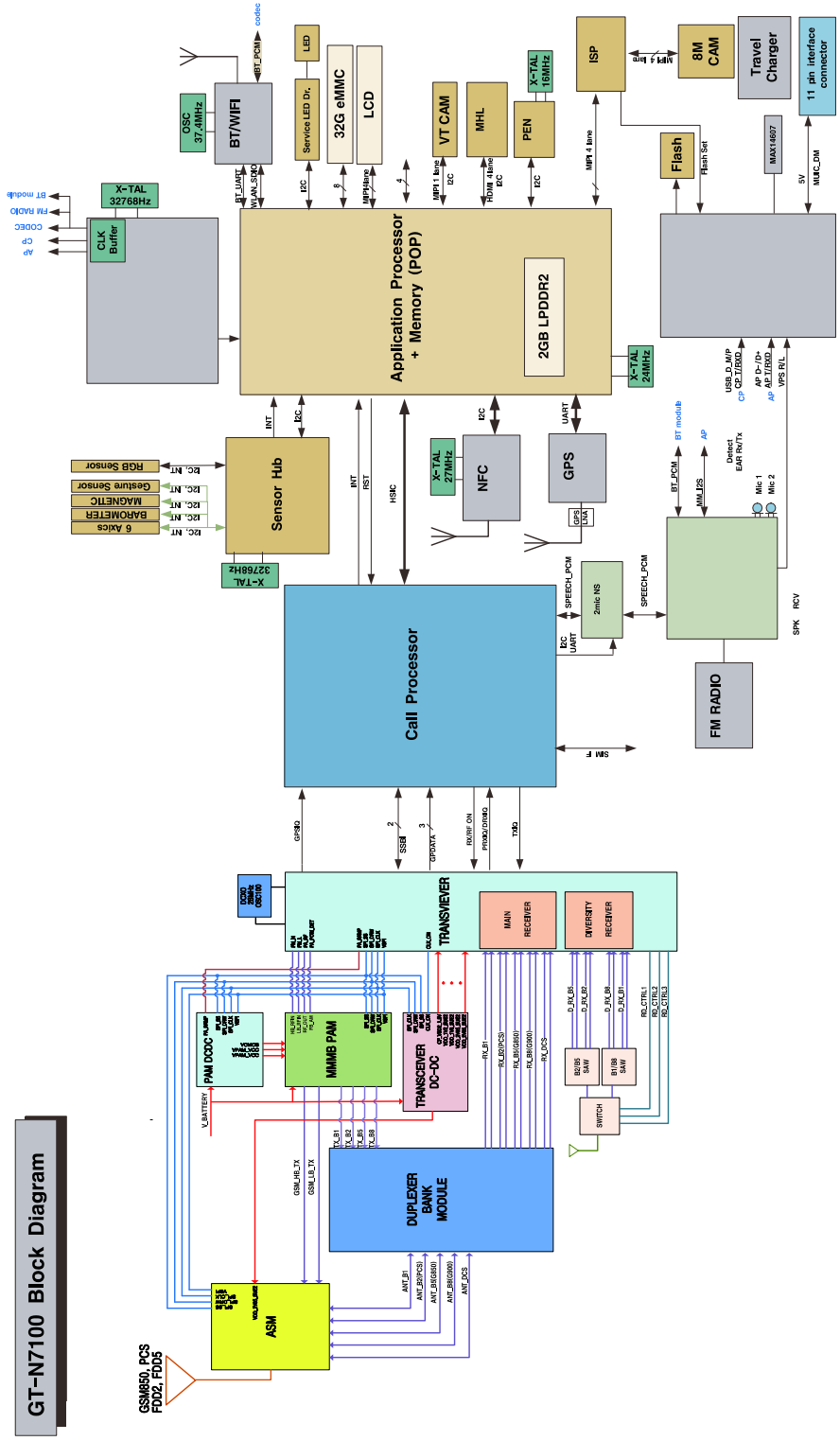

保密和所有权-本维修手册内容的变更恕不另行通知。
未经三星书面授权而发布，传送，或违背本文件中的任何内容或数据是严格禁止的。

8-2.主板图

8-2-1.顶部

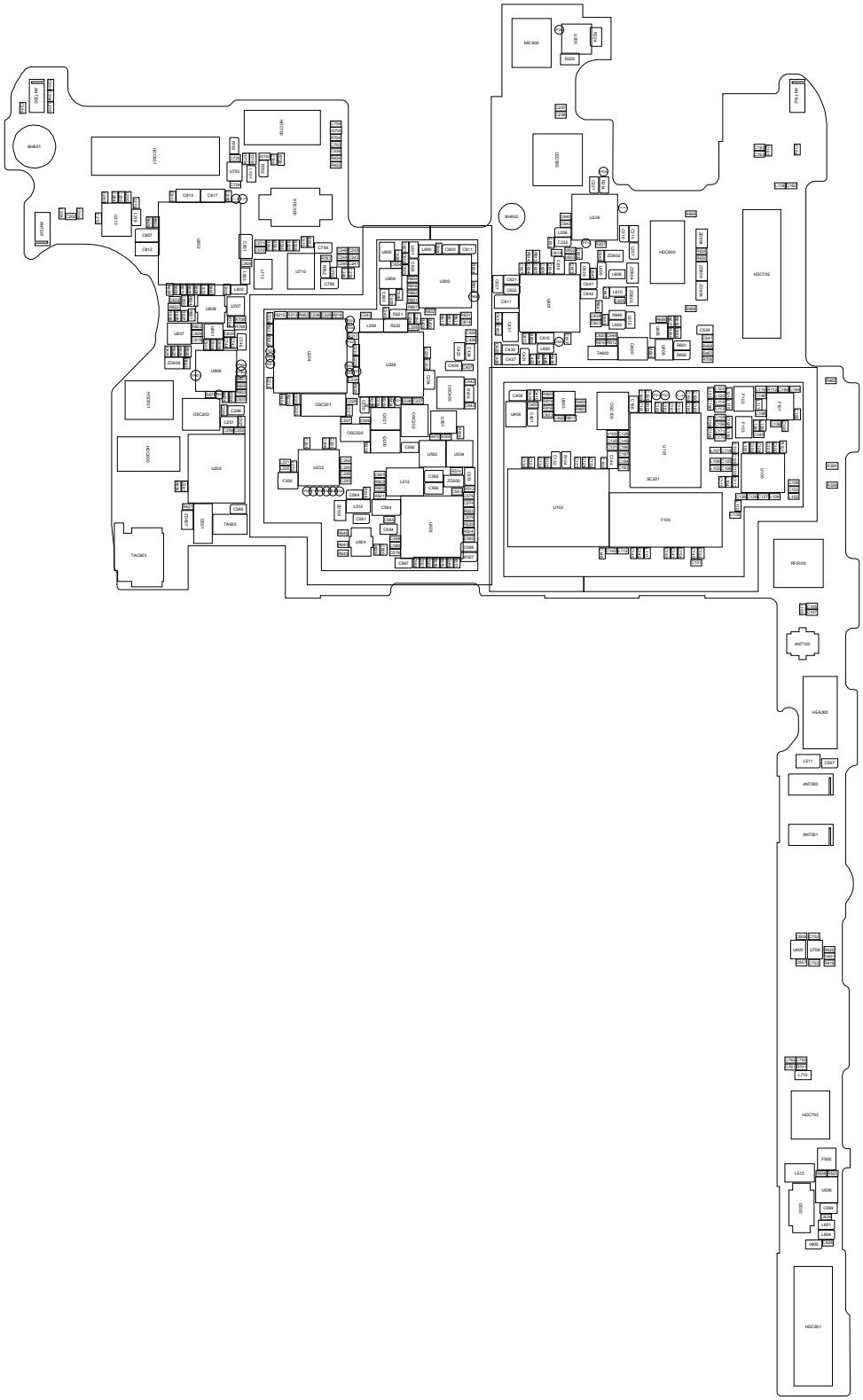

保密和所有权-本维修手册内容的变更恕不另行通知。
未经三星书面授权而发布，传送，或违背本文件中的任何内容或数据是严格禁止的。

8-2-2.底部

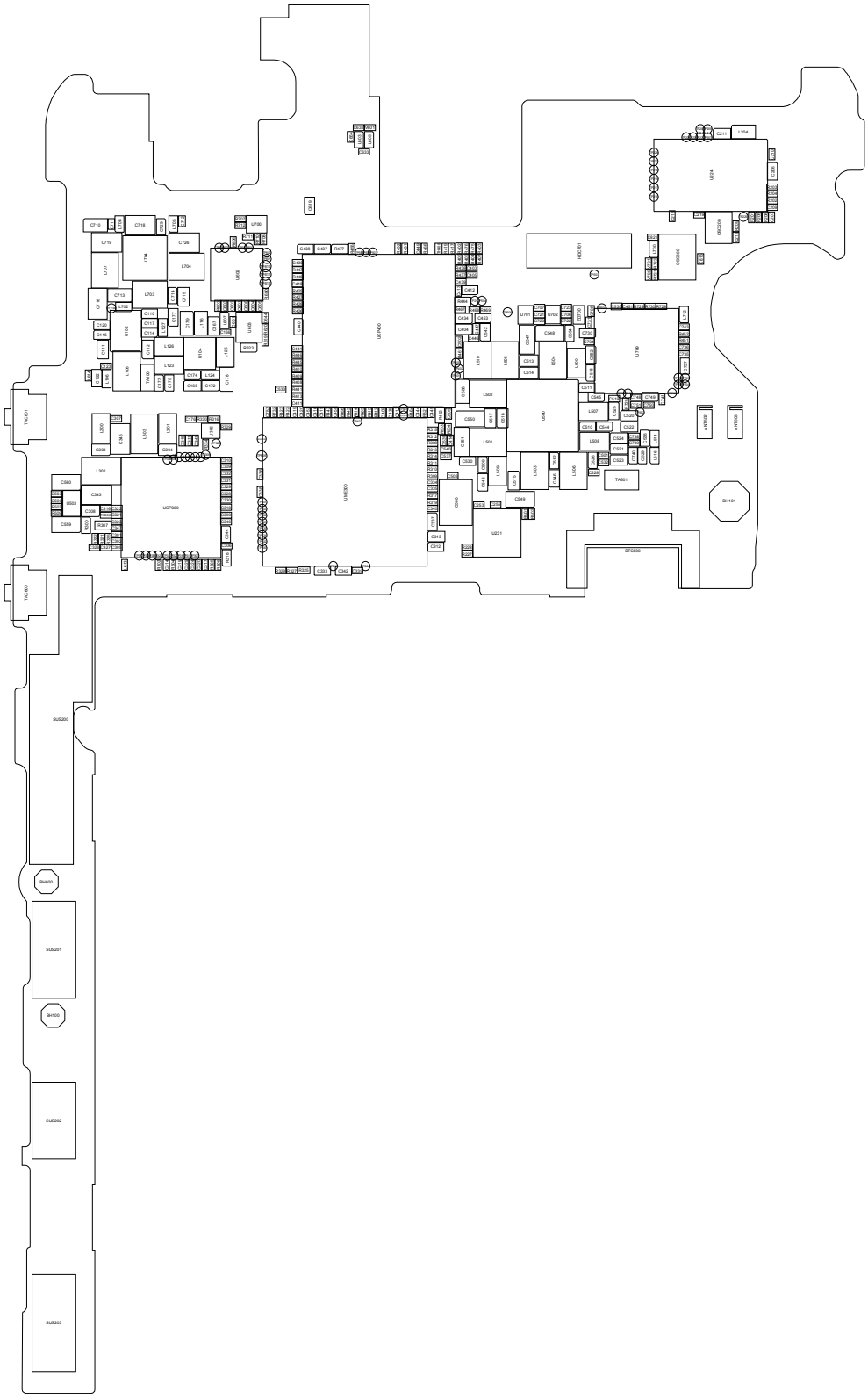

保密和所有权-本维修手册内容的变更恕不另行通知。
未经三星书面授权而发布，传送，或违背本文件中的任何内容或数据是严格禁止的。

8-3-1 开机

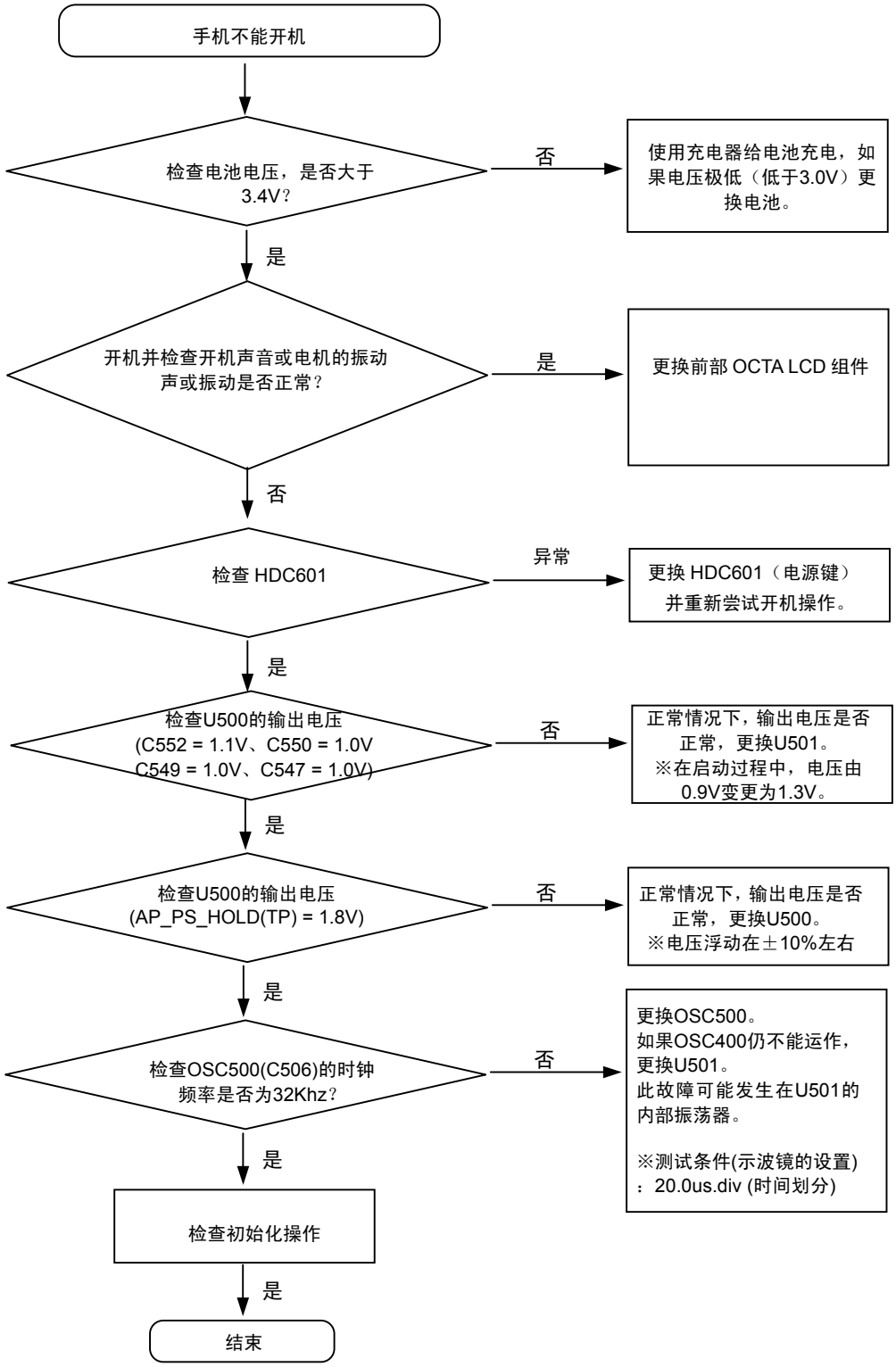

保密和所有权-本维修手册内容的变更恕不另行通知。
未经三星书面授权而发布，传送，或违背本文件中的任何内容或数据是严格禁止的。

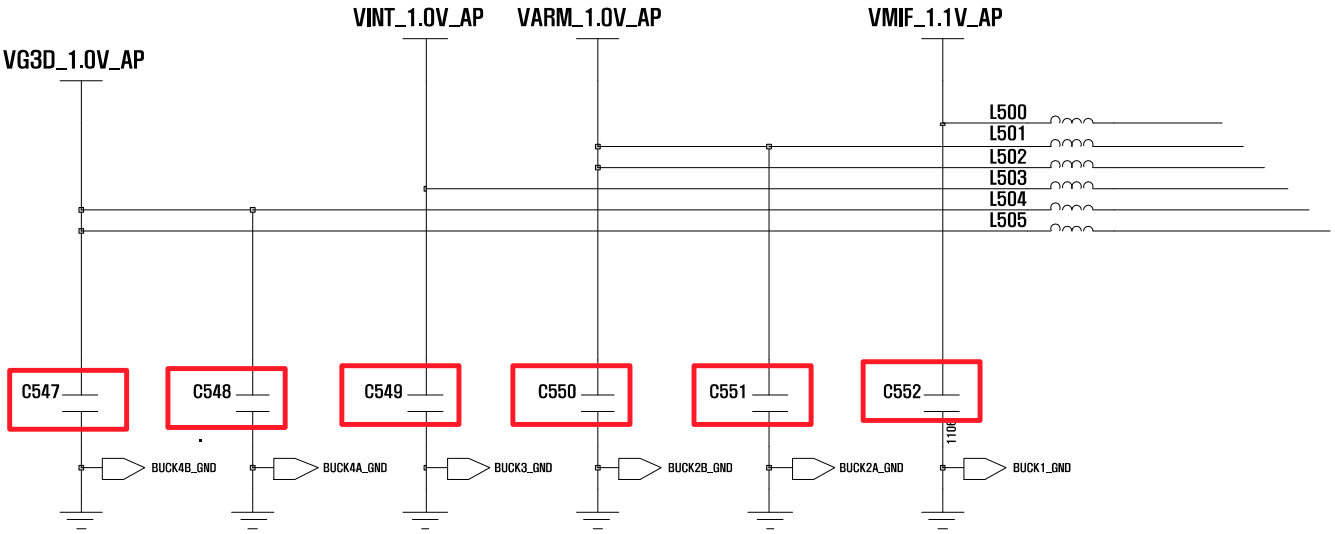

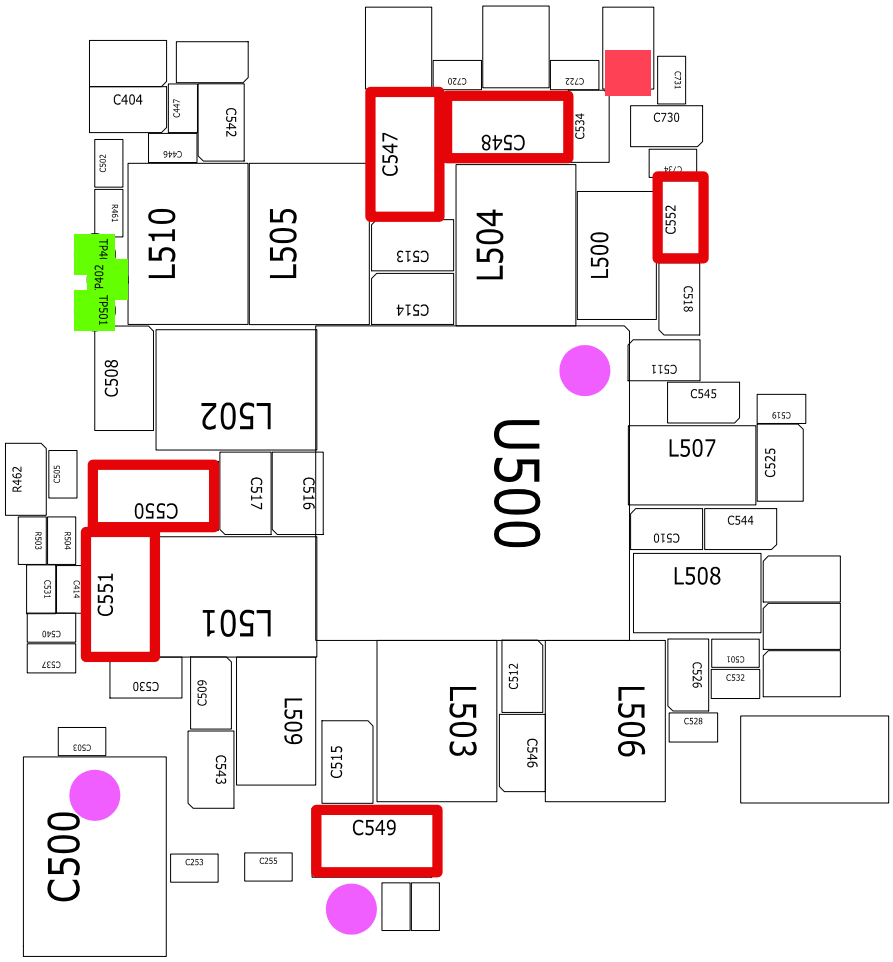

Confidential and proprietary-the contents in this service guide subject to change without prior notice.
Distribution, transmission, or infringement of any content or data from this document without Samsung's written authorization is strictly prohibited.

8-3-2.初始化

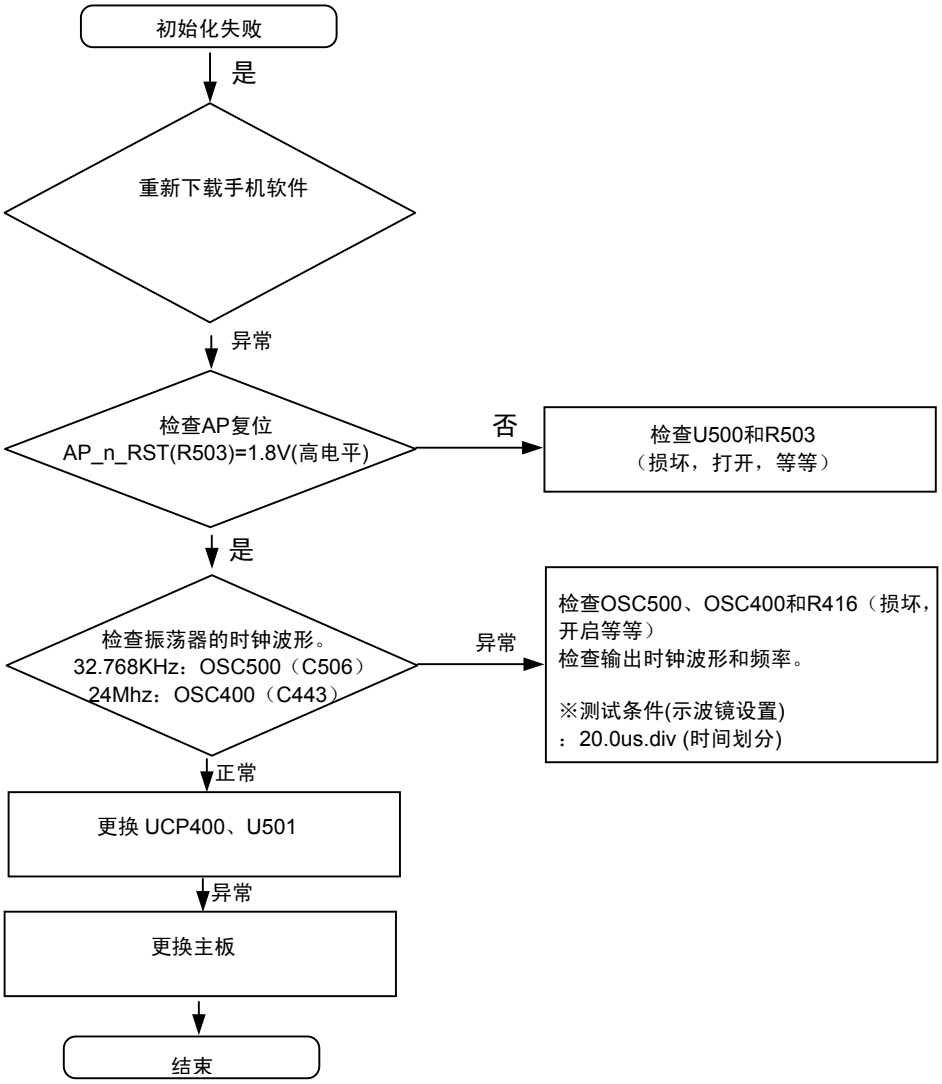

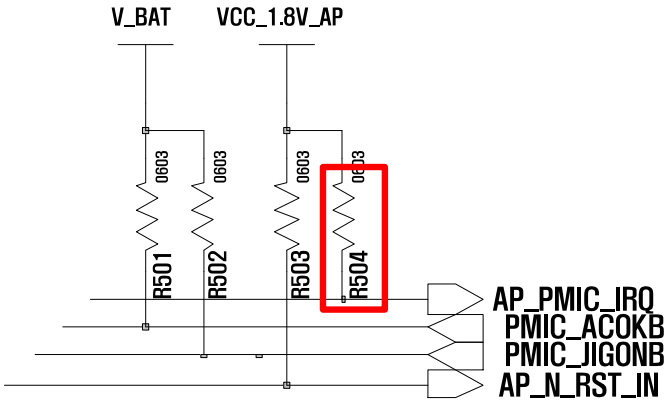

保密和所有权-本维修手册内容的变更恕不另行通知。
未经三星书面授权而发布，传送，或违背本文件中的任何内容或数据是严格禁止的。

AP CLOCK

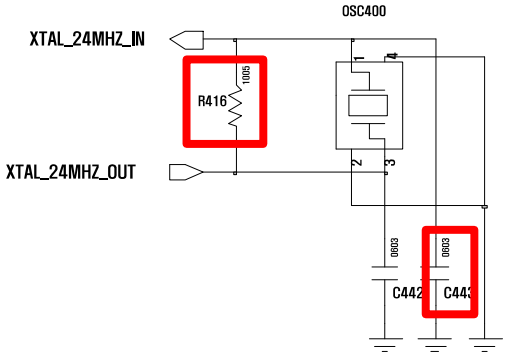

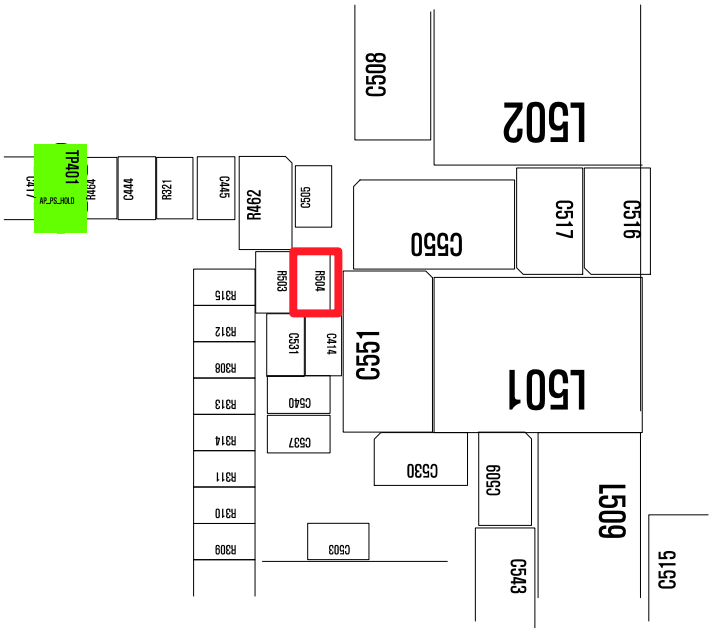

Confidential and proprietary-the contents in this service guide subject to change without prior notice.
Distribution, transmission, or infringement of any content or data from this document without Samsung's written authorization is strictly prohibited.

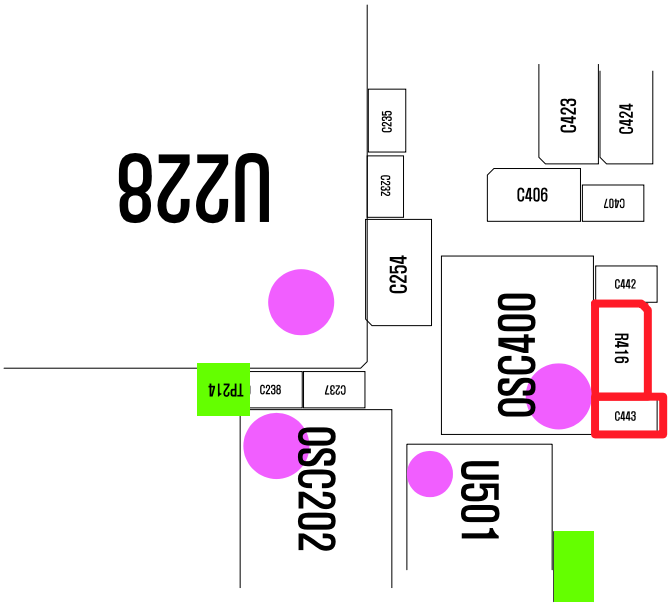

Confidential and proprietary-the contents in this service guide subject to change without prior notice.
Distribution, transmission, or infringement of any content or data from this document without Samsung's written authorization is strictly prohibited.

8-3-3．无服务

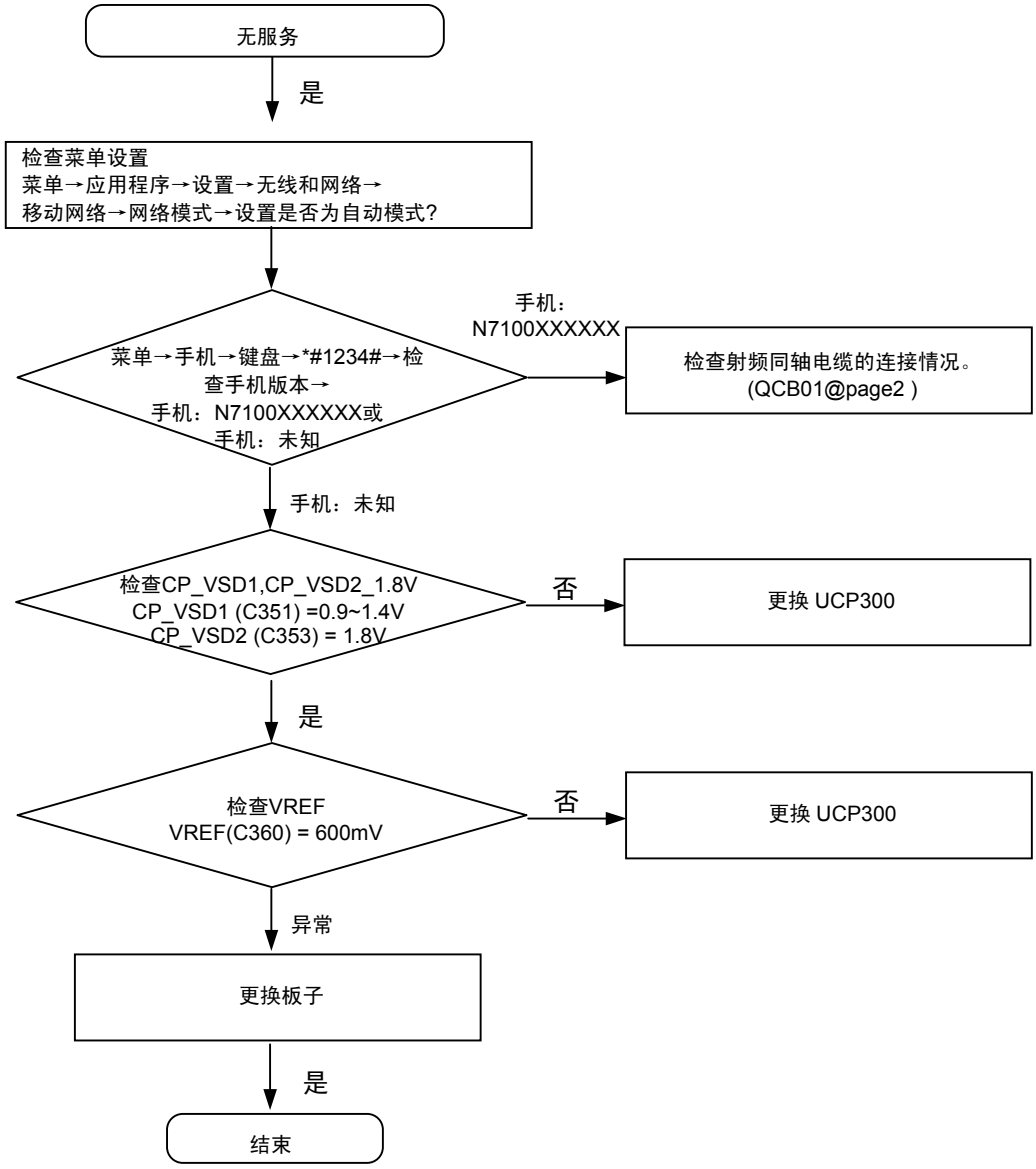

保密和所有权-本维修手册内容的变更恕不另行通知。
未经三星书面授权而发布，传送，或违背本文件中的任何内容或数据是严格禁止的。

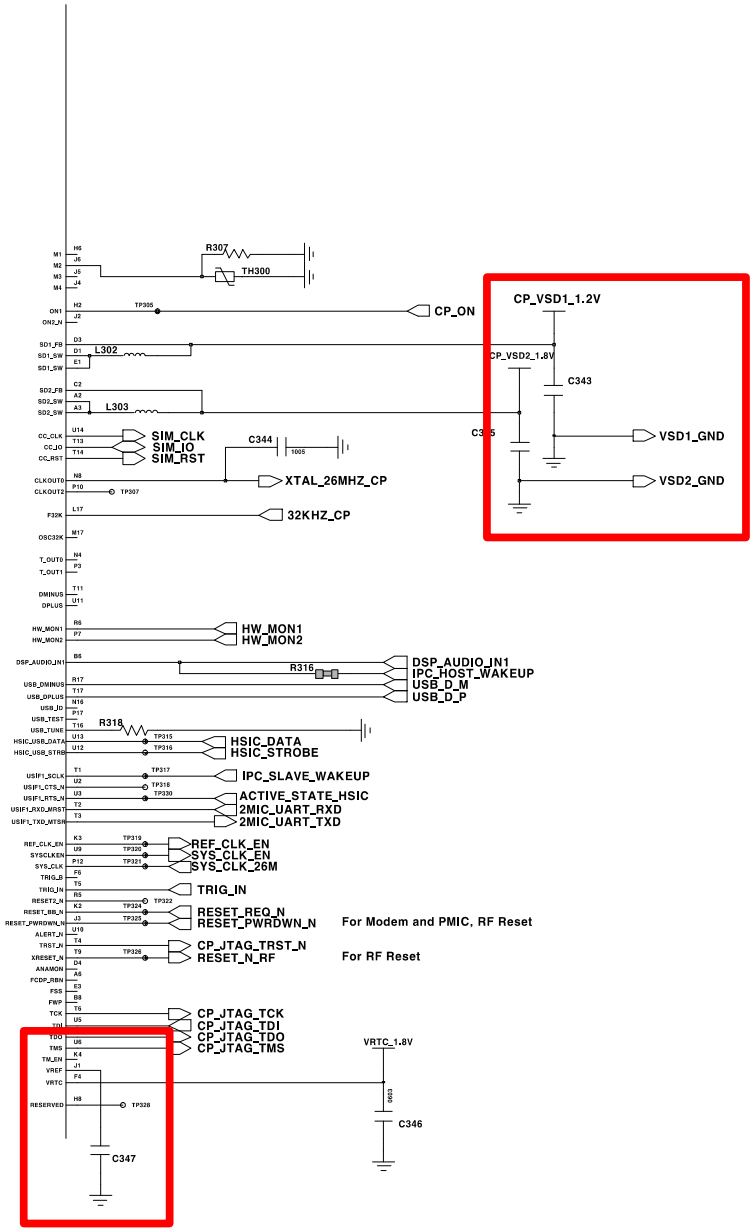

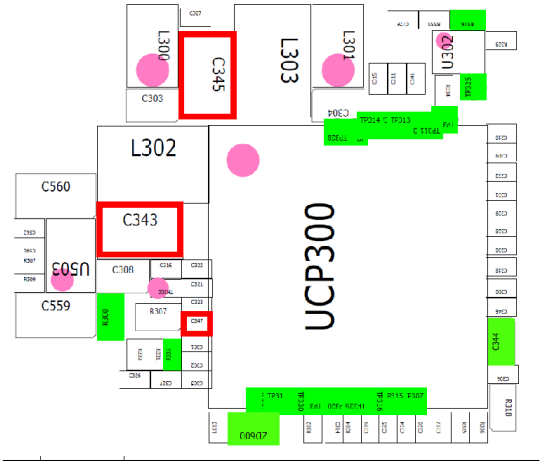

Confidential and proprietary-the contents in this service guide subject to change without prior notice.
Distribution, transmission, or infringement of any content or data from this document without Samsung's written authorization is strictly prohibited.

8-3-4.Sim 卡

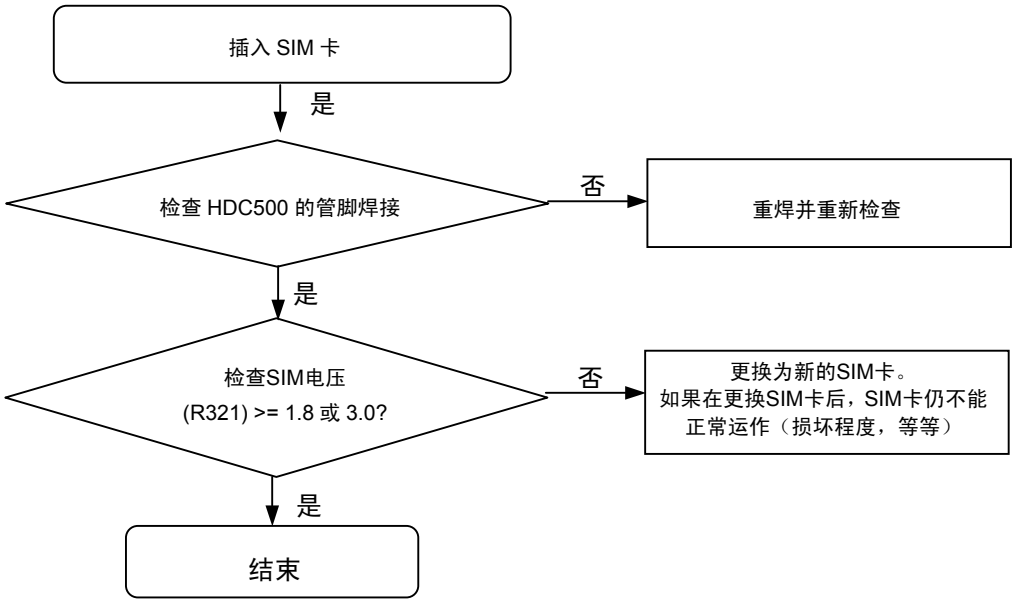

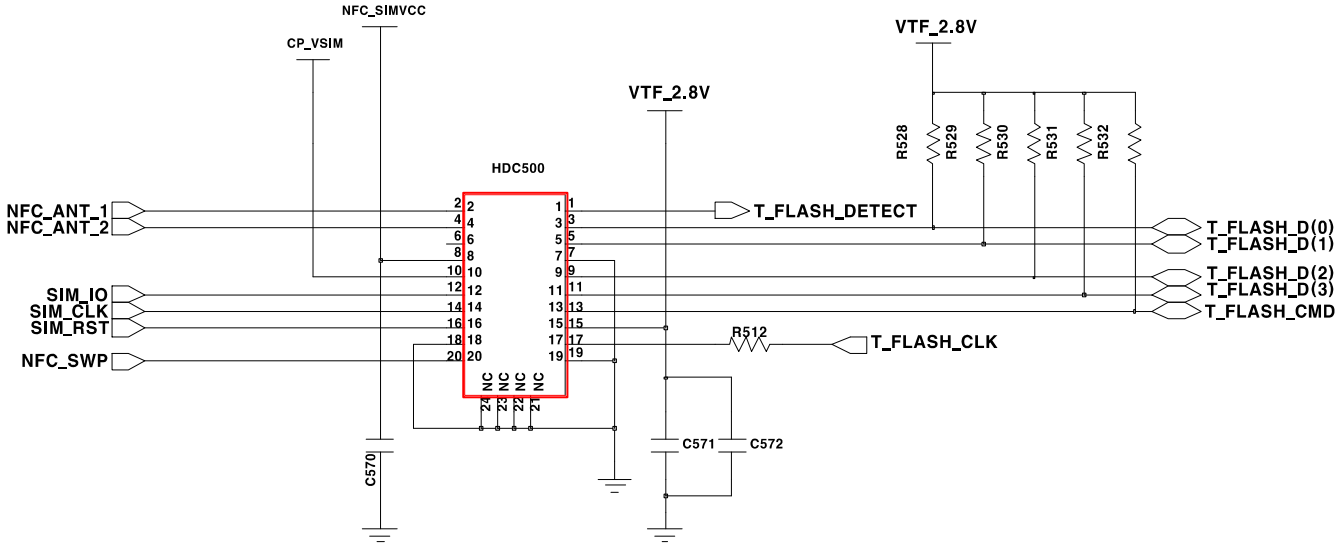

保密和所有权-本维修手册内容的变更恕不另行通知。
未经三星书面授权而发布，传送，或违背本文件中的任何内容或数据是严格禁止的。

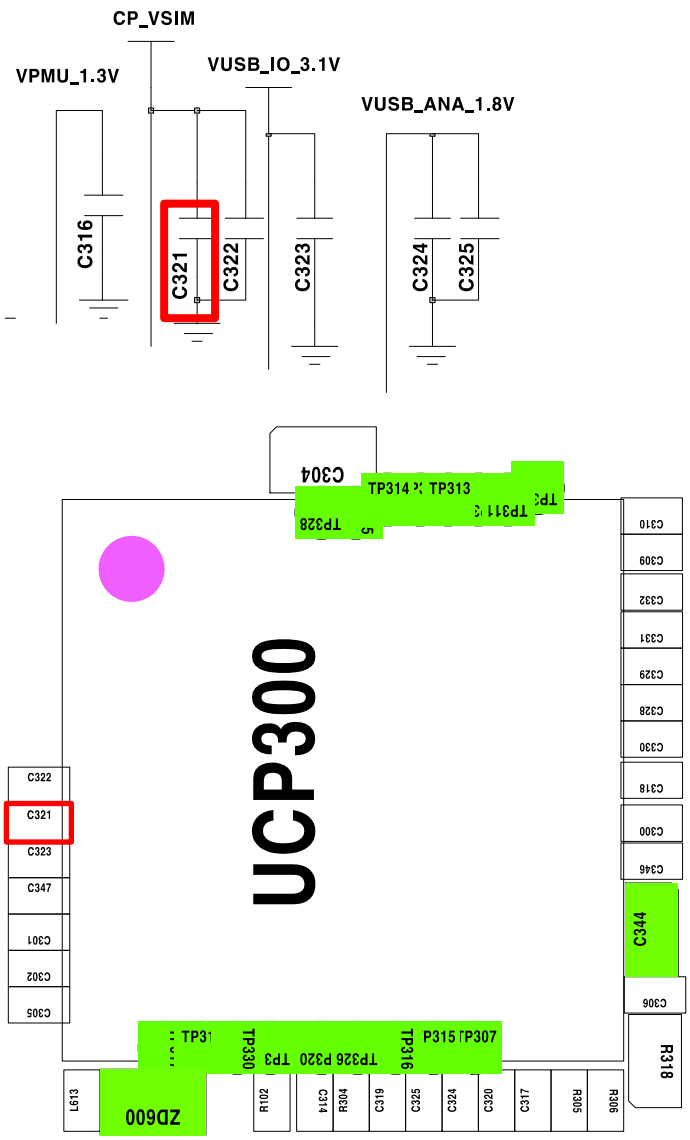

Confidential and proprietary-the contents in this service guide subject to change without prior notice.
Distribution, transmission, or infringement of any content or data from this document without Samsung's written authorization is strictly prohibited.

8-3-5.充电部分

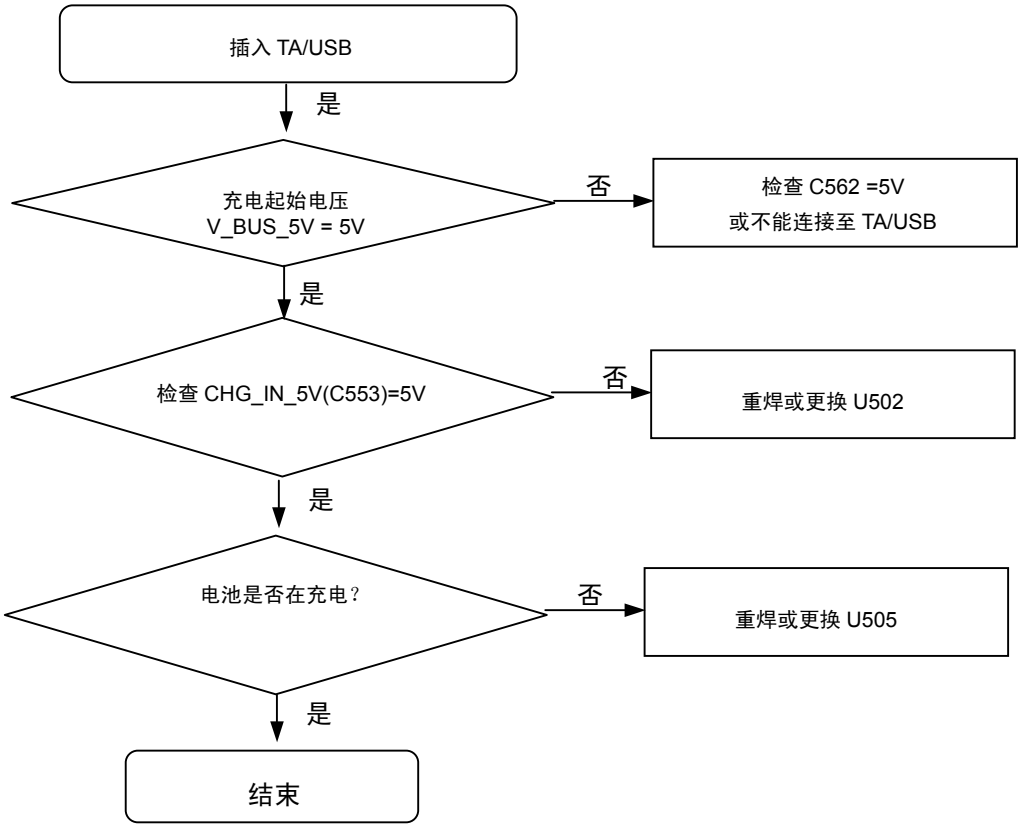

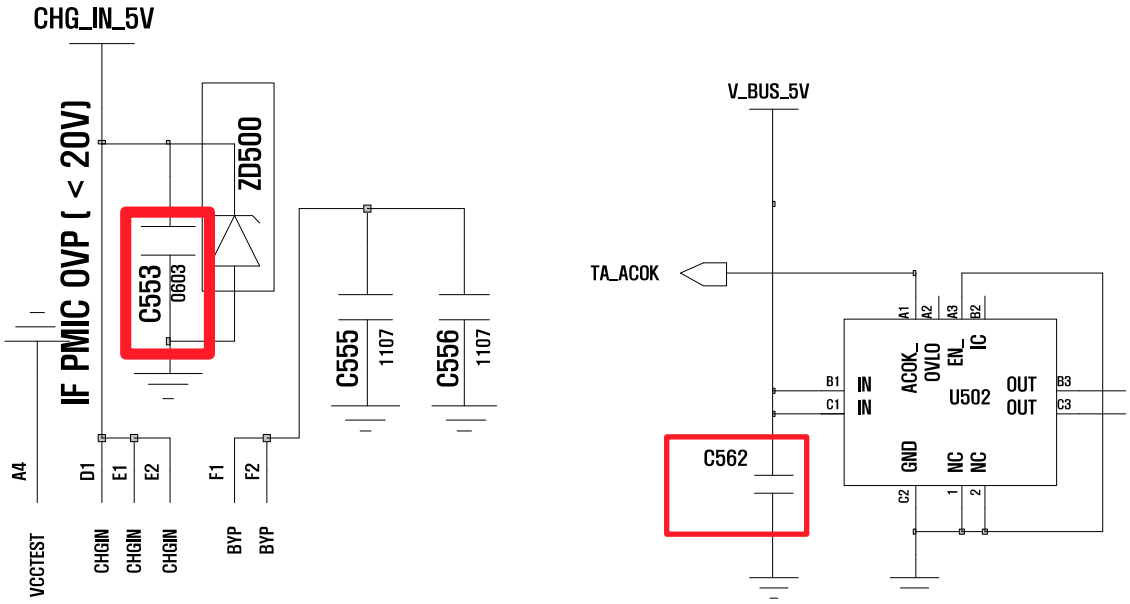

保密和所有权-本维修手册内容的变更恕不另行通知。
未经三星书面授权而发布，传送，或违背本文件中的任何内容或数据是严格禁止的。

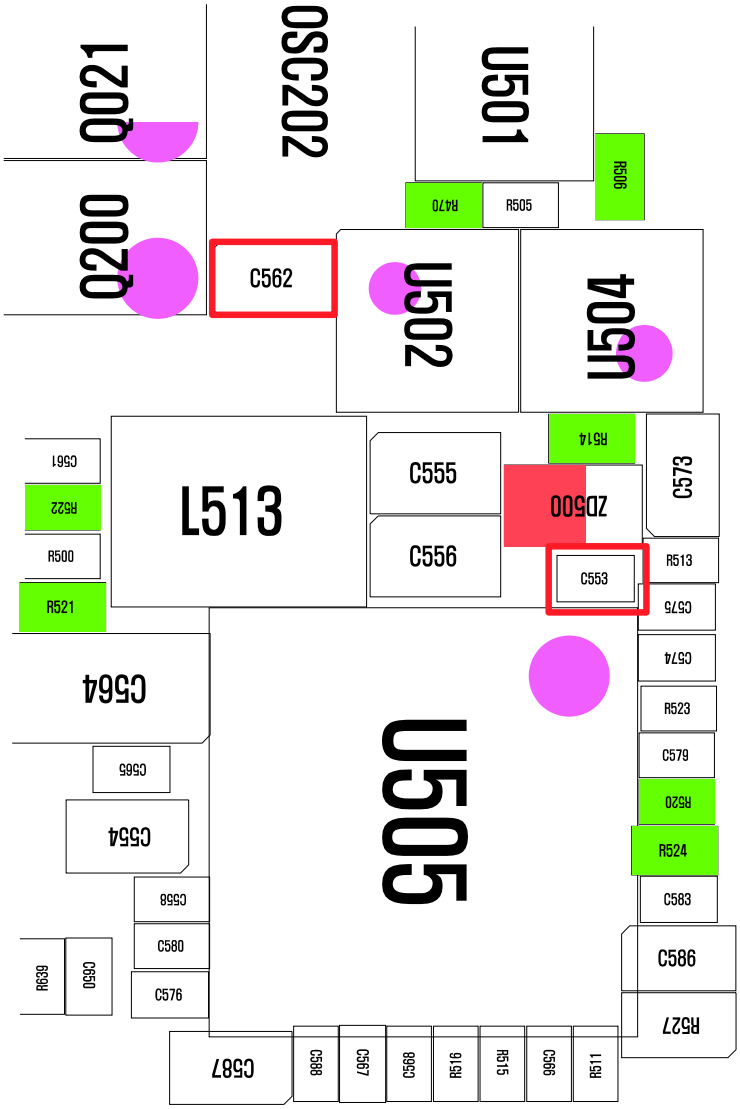

Confidential and proprietary-the contents in this service guide subject to change without prior notice.
Distribution, transmission, or infringement of any content or data from this document without Samsung's written authorization is strictly prohibited.

8-3-6.话筒部分（主话筒）

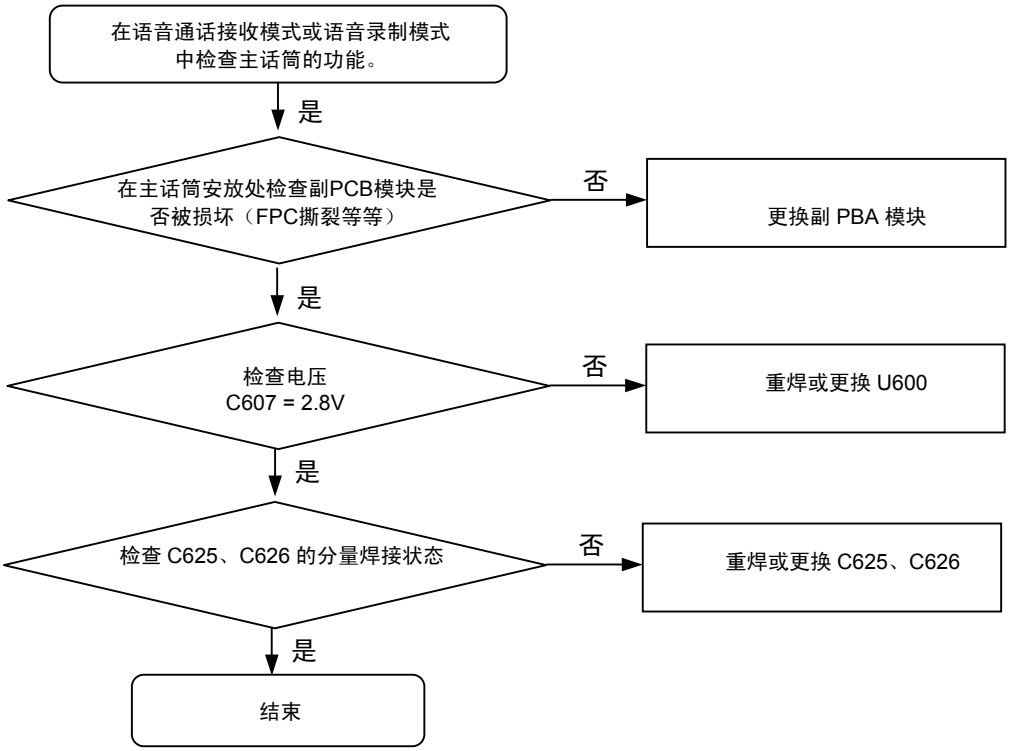

保密和所有权-本维修手册内容的变更恕不另行通知。
未经三星书面授权而发布，传送，或违背本文件中的任何内容或数据是严格禁止的。

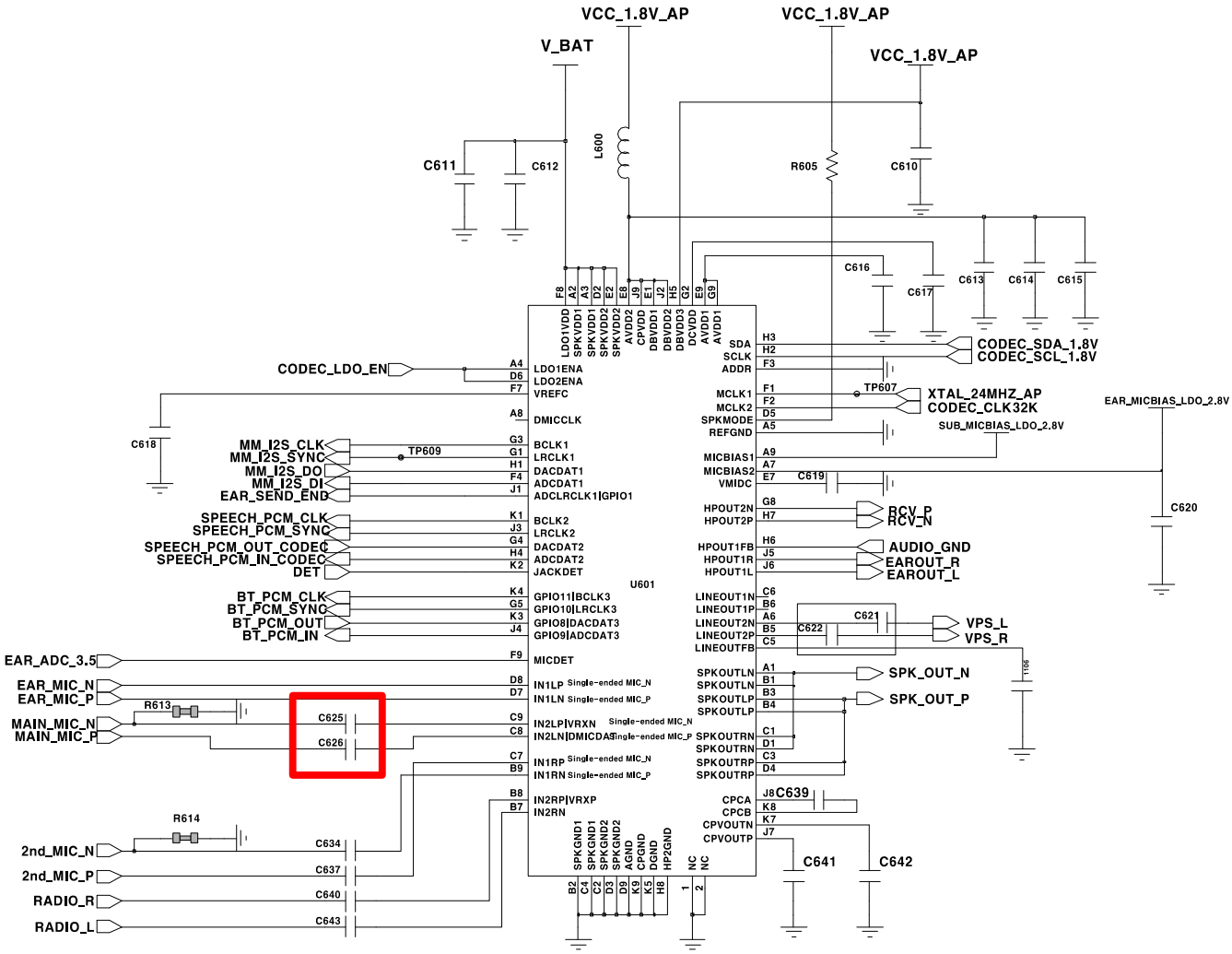

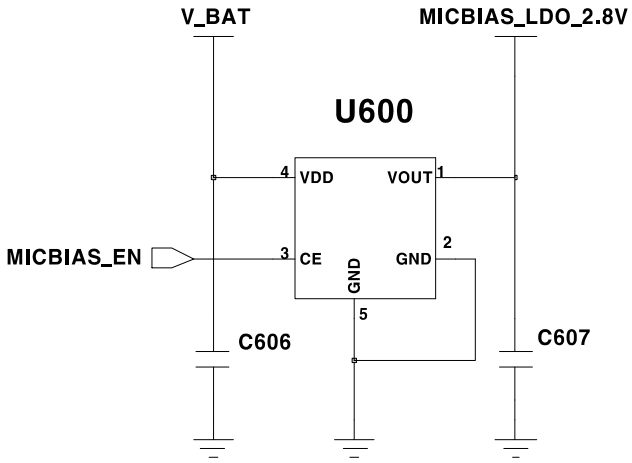

Confidential and proprietary-the contents in this service guide subject to change without prior notice.
Distribution, transmission, or infringement of any content or data from this document without Samsung's written authorization is strictly prohibited.

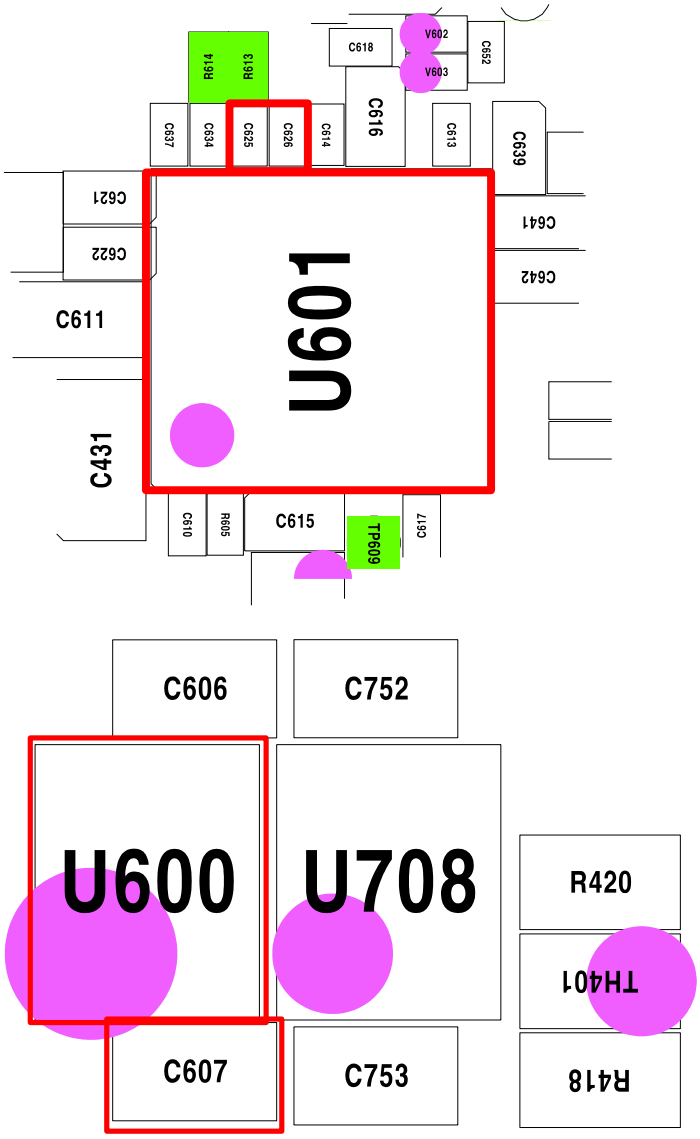

Confidential and proprietary-the contents in this service guide subject to change without prior notice.
Distribution, transmission, or infringement of any content or data from this document without Samsung's written authorization is strictly prohibited.

8-3-7.话筒部分（副话筒）

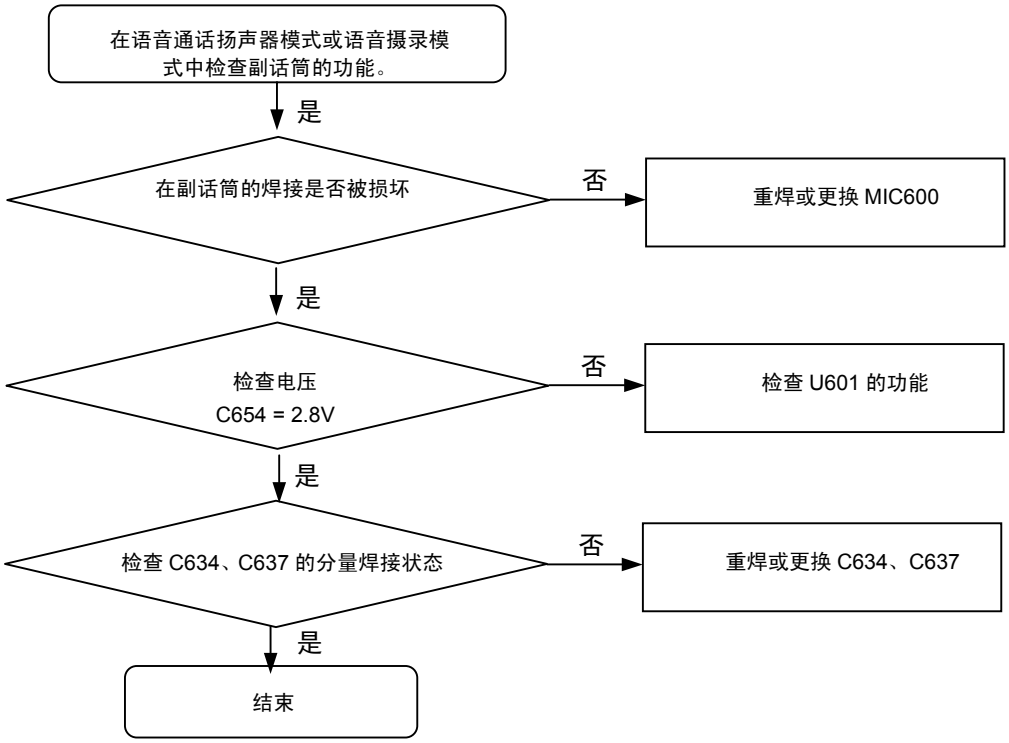

保密和所有权-本维修手册内容的变更恕不另行通知。
未经三星书面授权而发布，传送，或违背本文件中的任何内容或数据是严格禁止的。

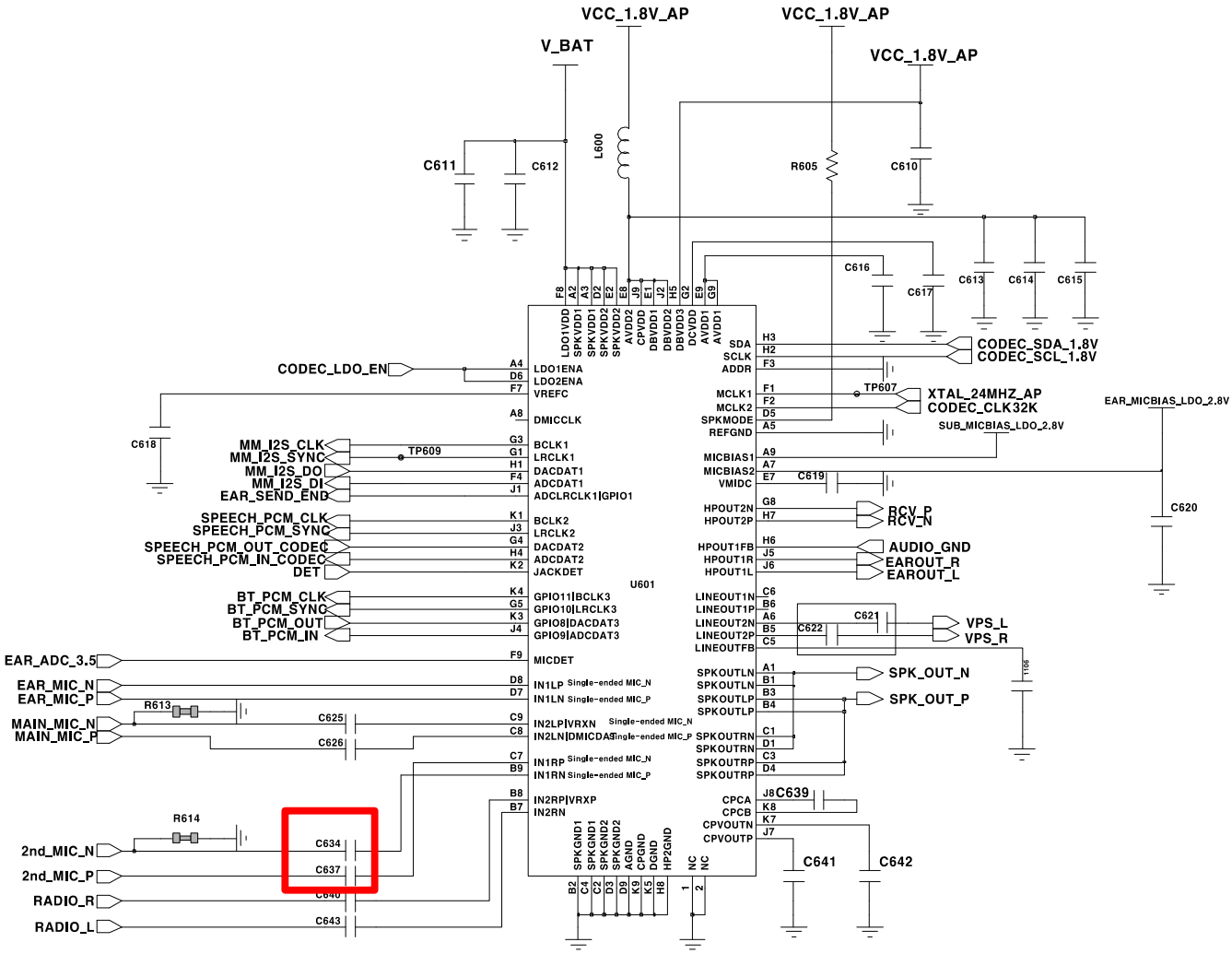

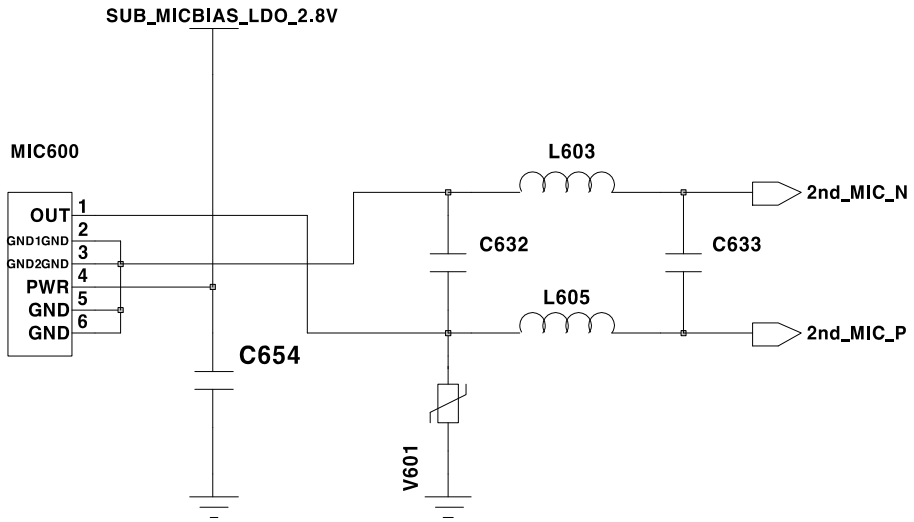

Confidential and proprietary-the contents in this service guide subject to change without prior notice.
Distribution, transmission, or infringement of any content or data from this document without Samsung's written authorization is strictly prohibited.

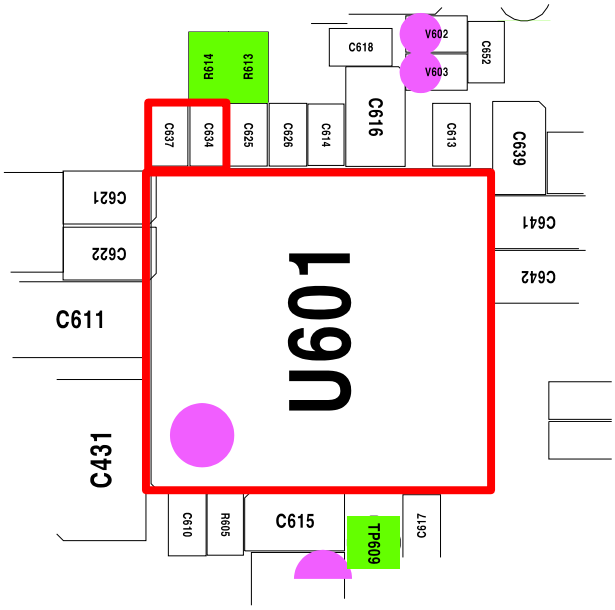

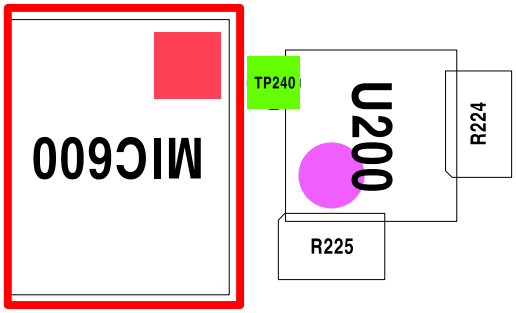

Confidential and proprietary-the contents in this service guide subject to change without prior notice.
Distribution, transmission, or infringement of any content or data from this document without Samsung's written authorization is strictly prohibited.

8-3-8.扬声器部分

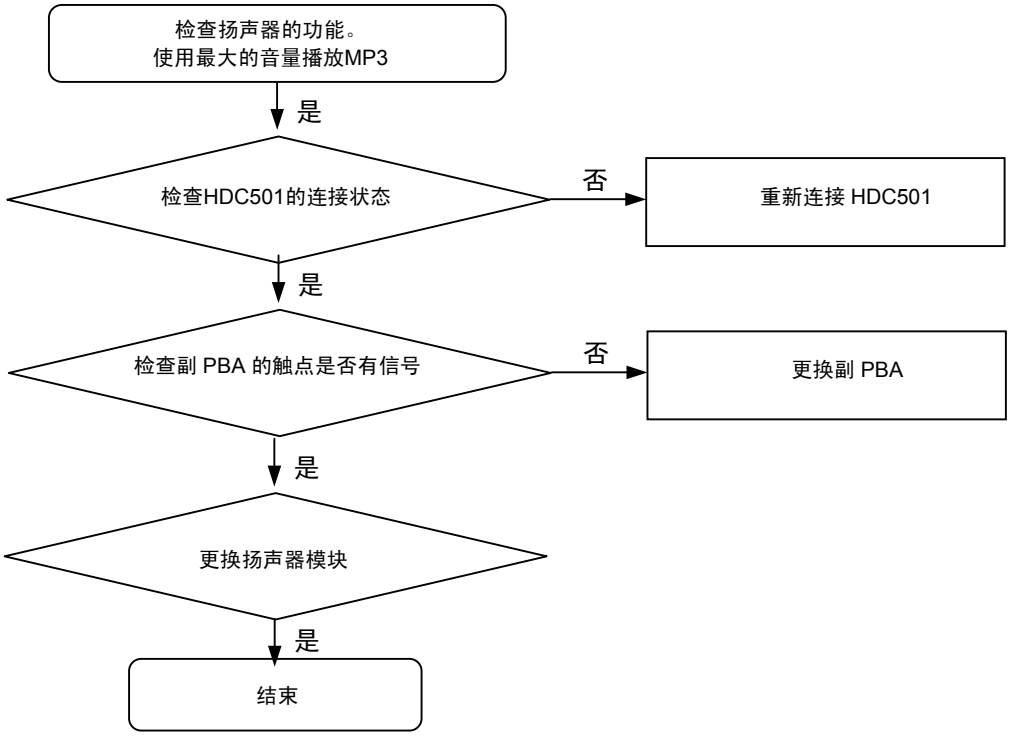

保密和所有权-本维修手册内容的变更恕不另行通知。
未经三星书面授权而发布，传送，或违背本文件中的任何内容或数据是严格禁止的。

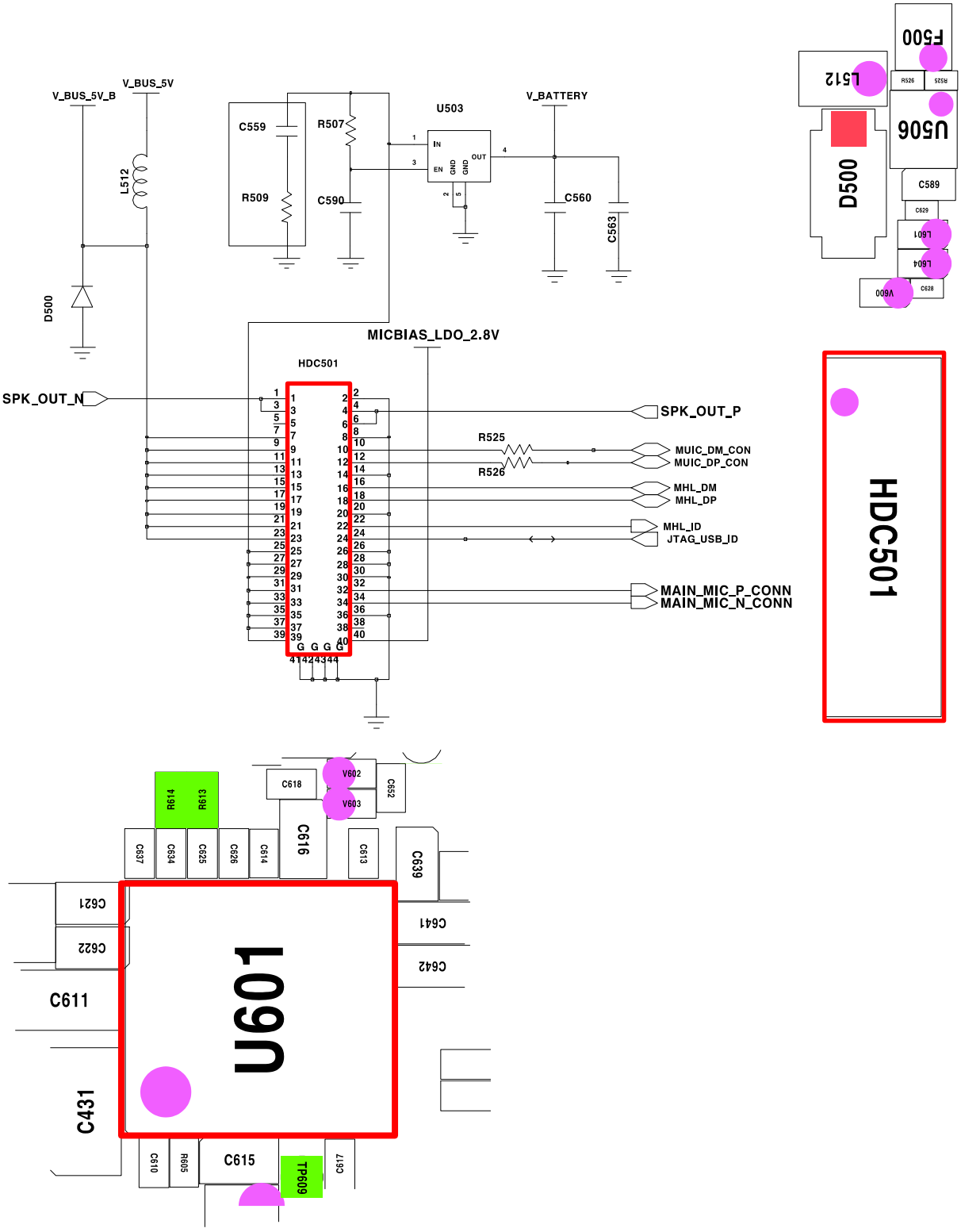

Confidential and proprietary-the contents in this service guide subject to change without prior notice.
Distribution, transmission, or infringement of any content or data from this document without Samsung's written authorization is strictly prohibited.

8-3-9.接收器部分

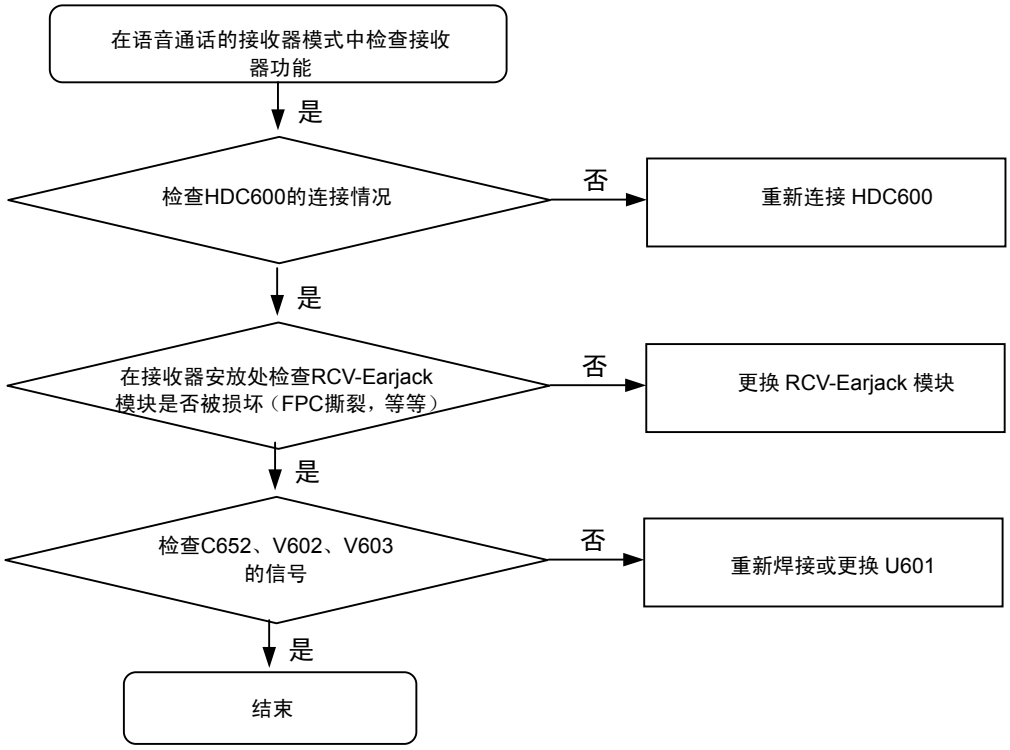

保密和所有权-本维修手册内容的变更恕不另行通知。
未经三星书面授权而发布，传送，或违背本文件中的任何内容或数据是严格禁止的。

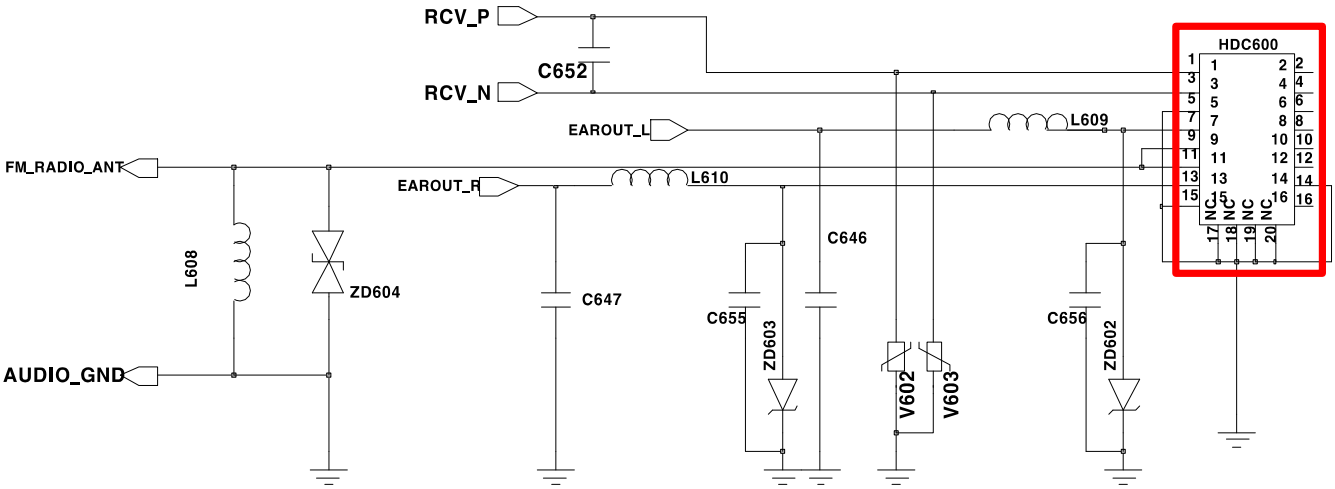

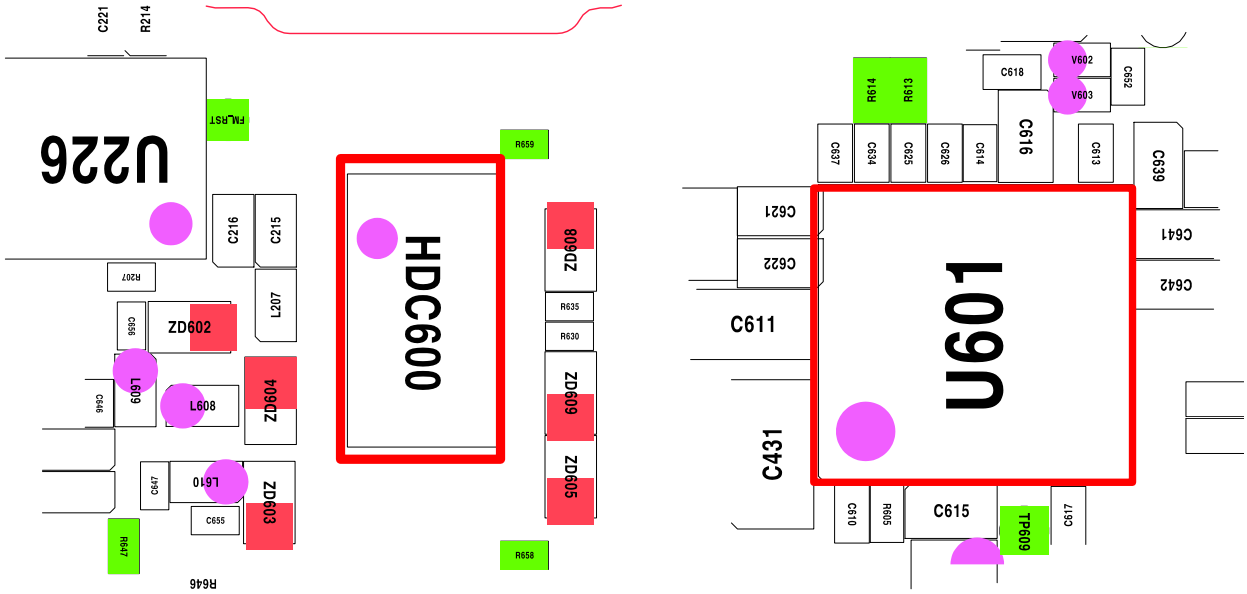

Confidential and proprietary-the contents in this service guide subject to change without prior notice.
Distribution, transmission, or infringement of any content or data from this document without Samsung's written authorization is strictly prohibited.

8-3-10.BT/WIFI

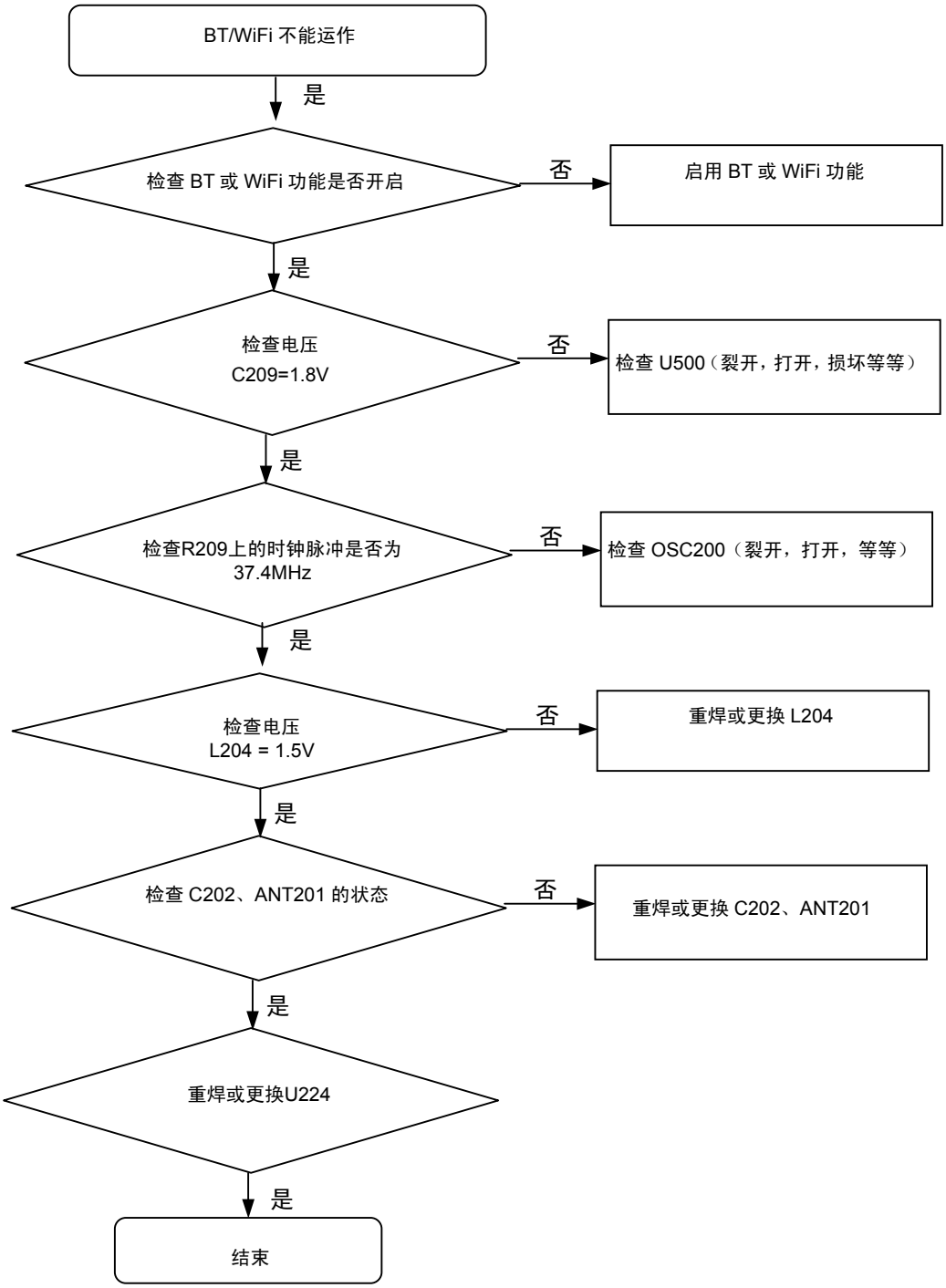

保密和所有权-本维修手册内容的变更恕不另行通知。
未经三星书面授权而发布，传送，或违背本文件中的任何内容或数据是严格禁止的。

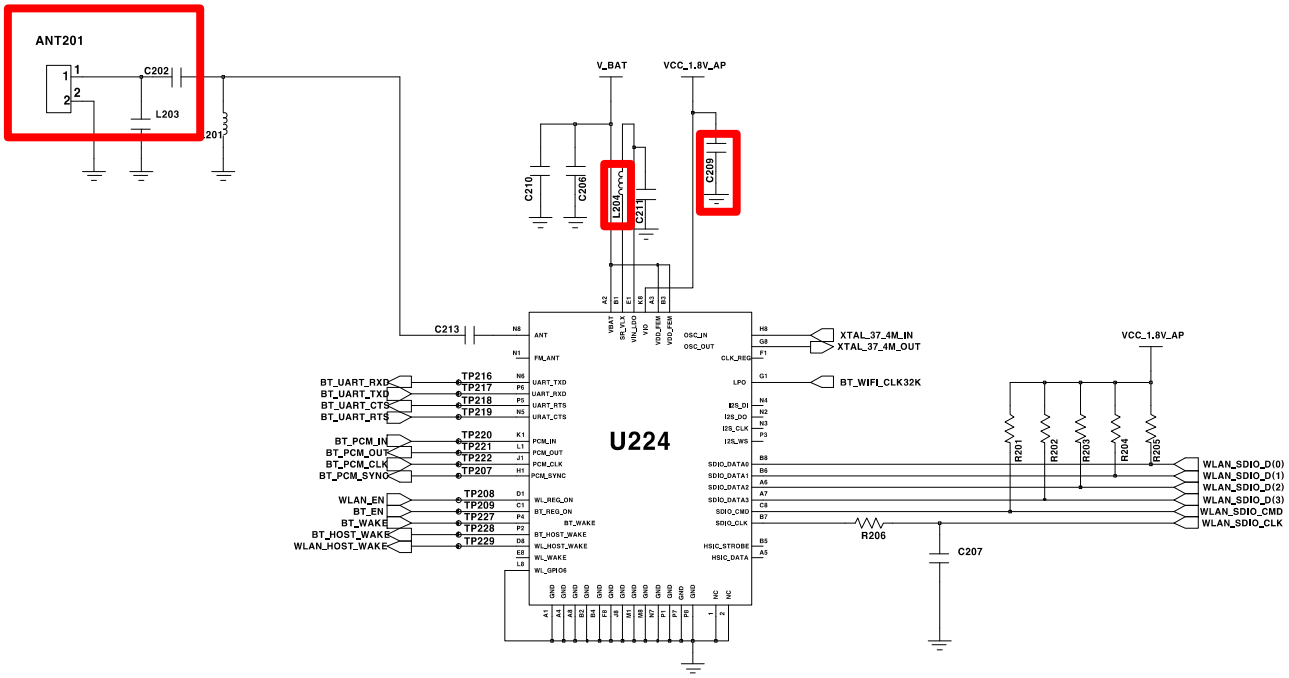

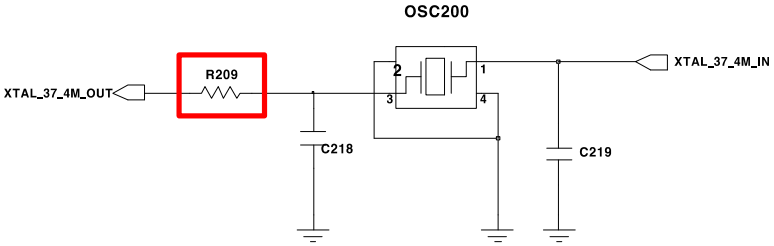

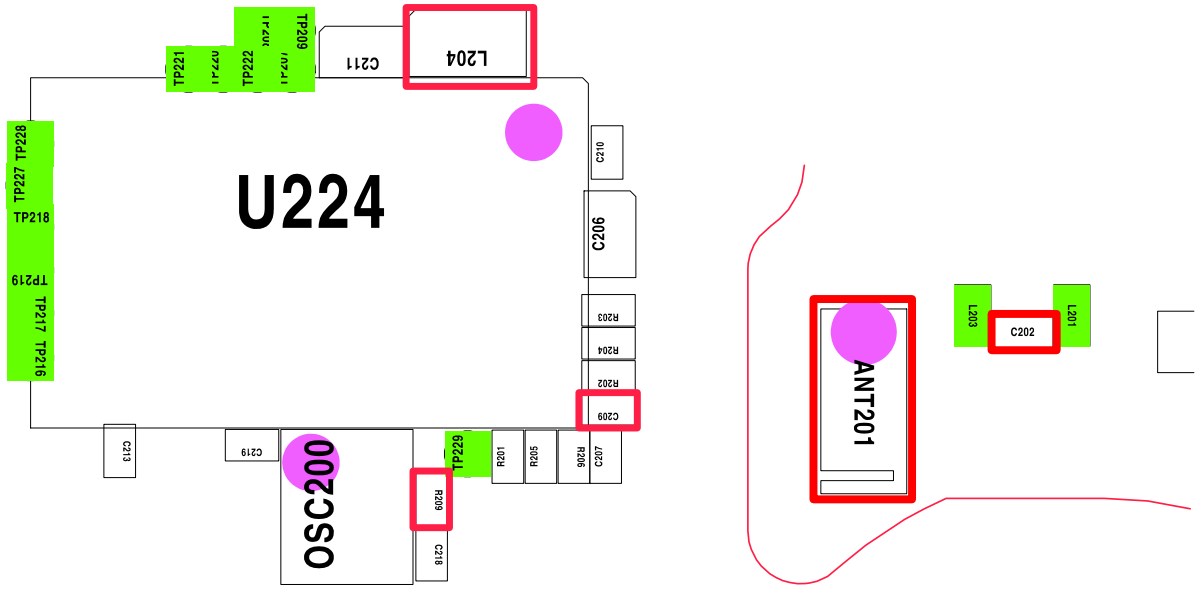

Confidential and proprietary-the contents in this service guide subject to change without prior notice.
Distribution, transmission, or infringement of any content or data from this document without Samsung's written authorization is strictly prohibited.

8-3-11.FM 收音机

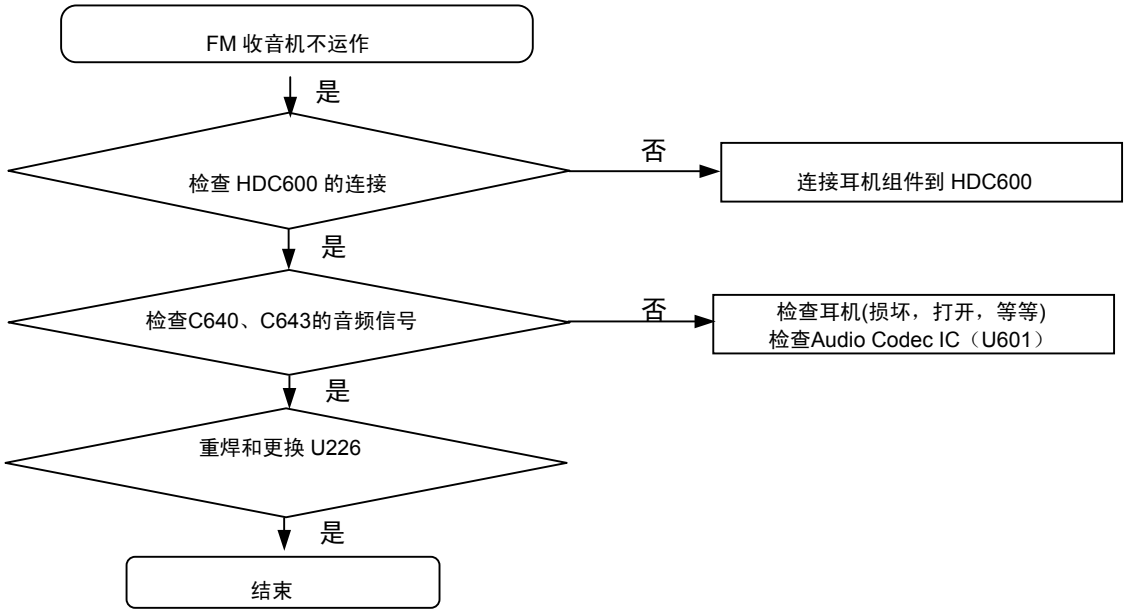

保密和所有权-本维修手册内容的变更恕不另行通知。
未经三星书面授权而发布，传送，或违背本文件中的任何内容或数据是严格禁止的。

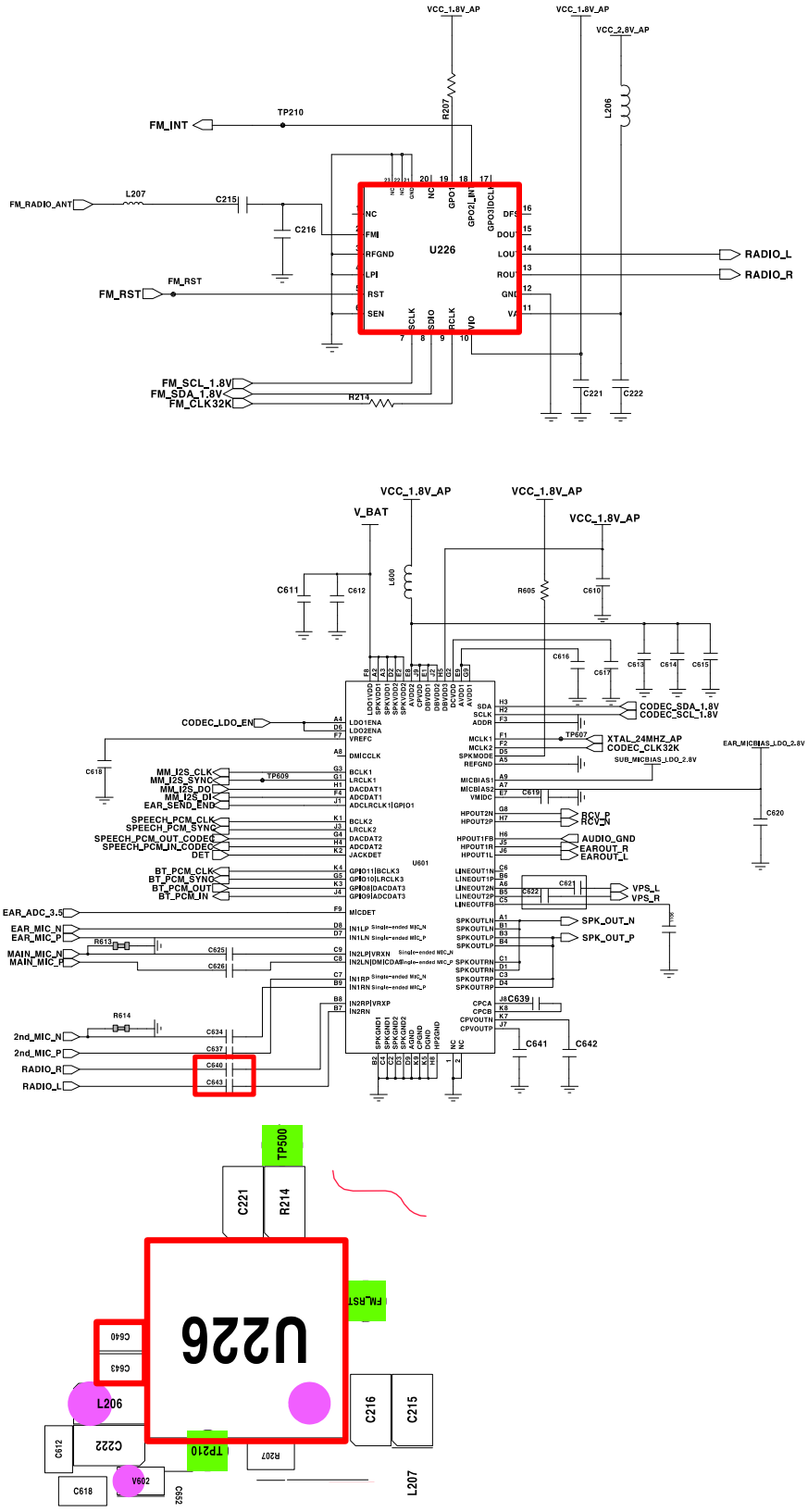

Confidential and proprietary-the contents in this service guide subject to change without prior notice.
Distribution, transmission, or infringement of any content or data from this document without Samsung's written authorization is strictly prohibited.

8-3-12.液晶显示屏

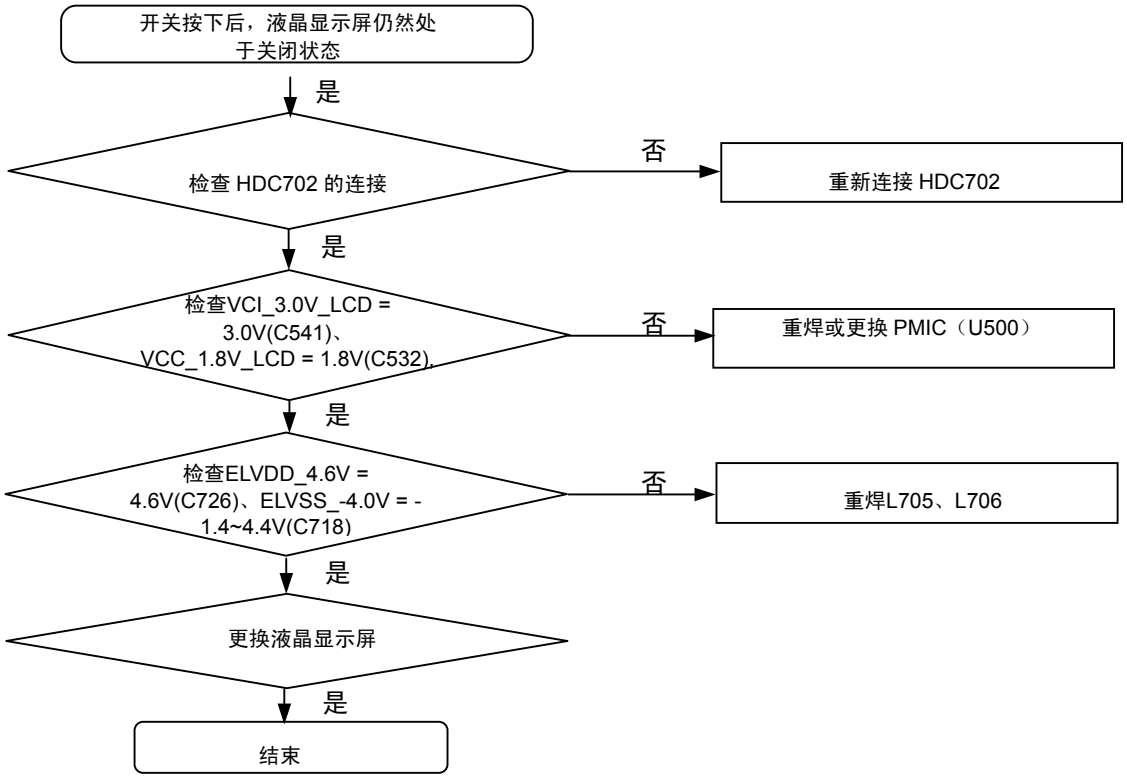

保密和所有权-本维修手册内容的变更恕不另行通知。
未经三星书面授权而发布，传送，或违背本文件中的任何内容或数据是严格禁止的。

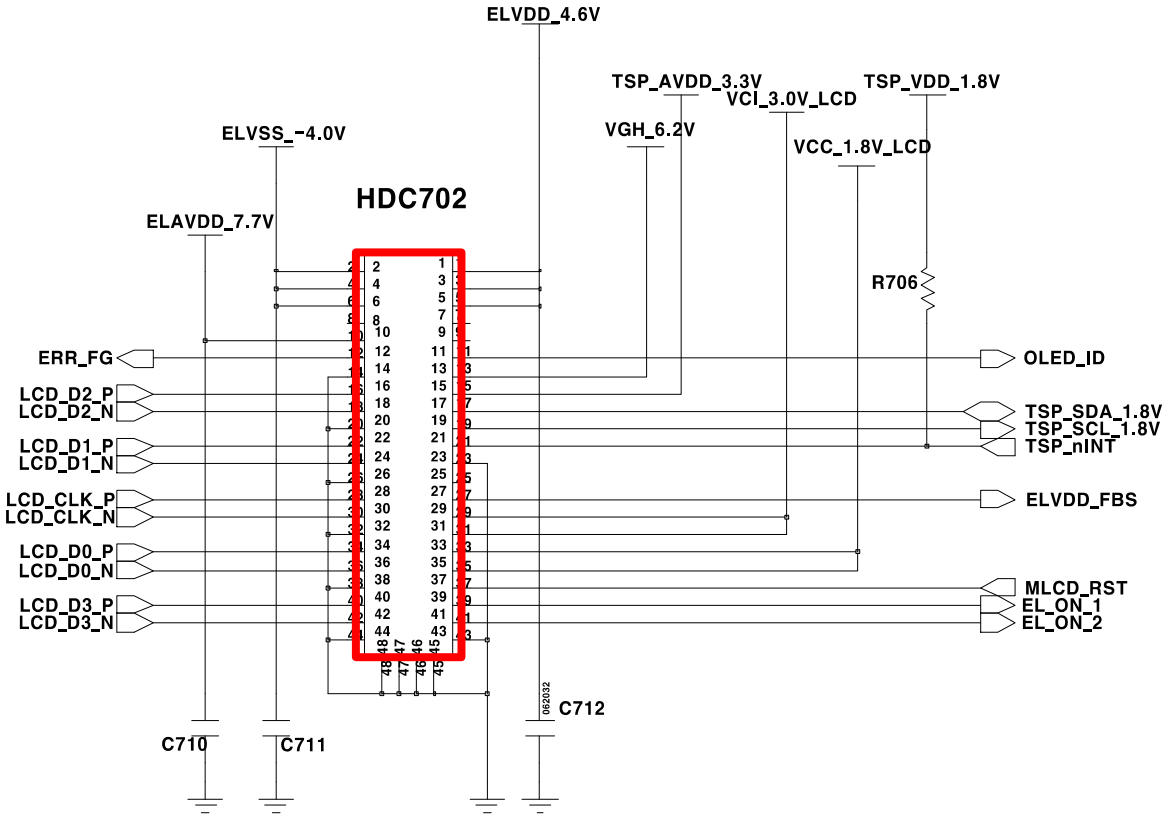

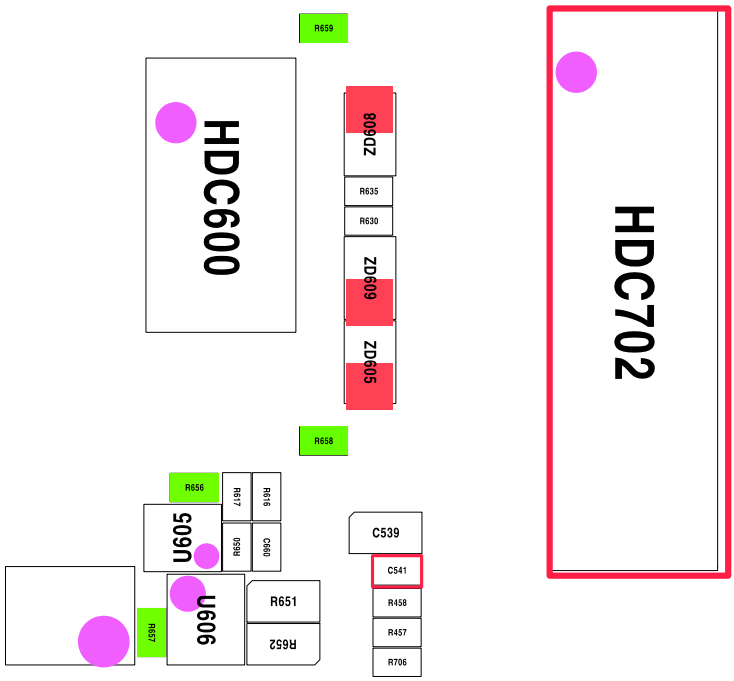

Confidential and proprietary-the contents in this service guide subject to change without prior notice.
Distribution, transmission, or infringement of any content or data from this document without Samsung's written authorization is strictly prohibited.

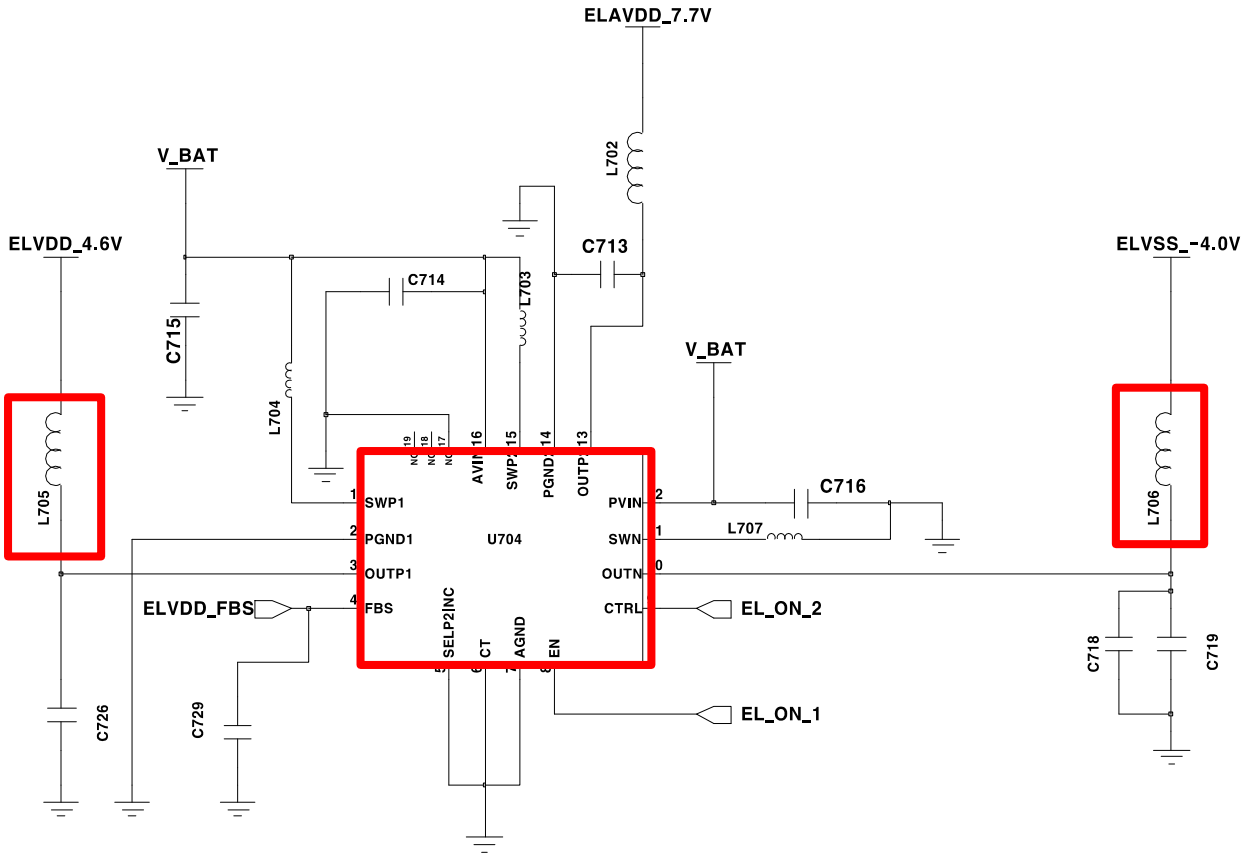

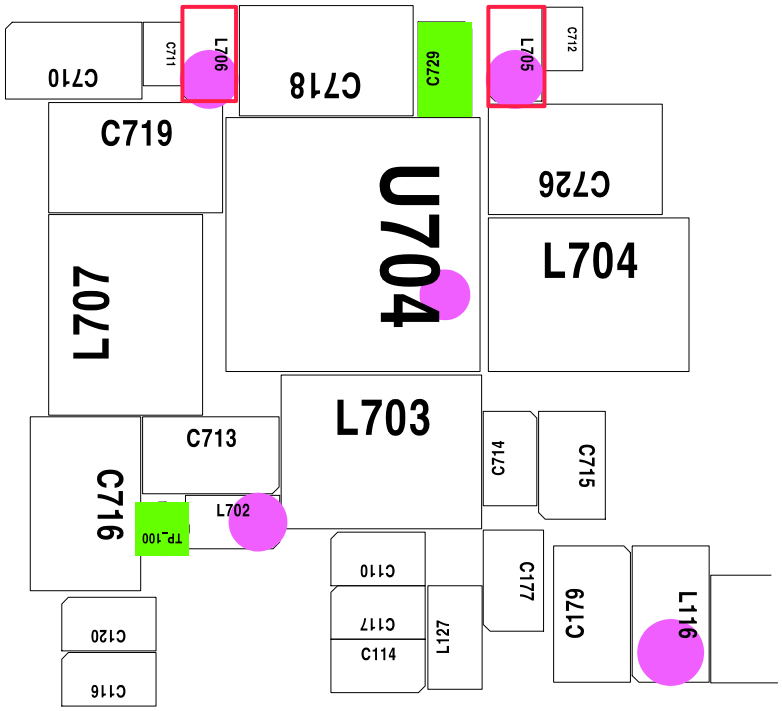

Confidential and proprietary-the contents in this service guide subject to change without prior notice.
Distribution, transmission, or infringement of any content or data from this document without Samsung's written authorization is strictly prohibited.

8-3-11.TSP

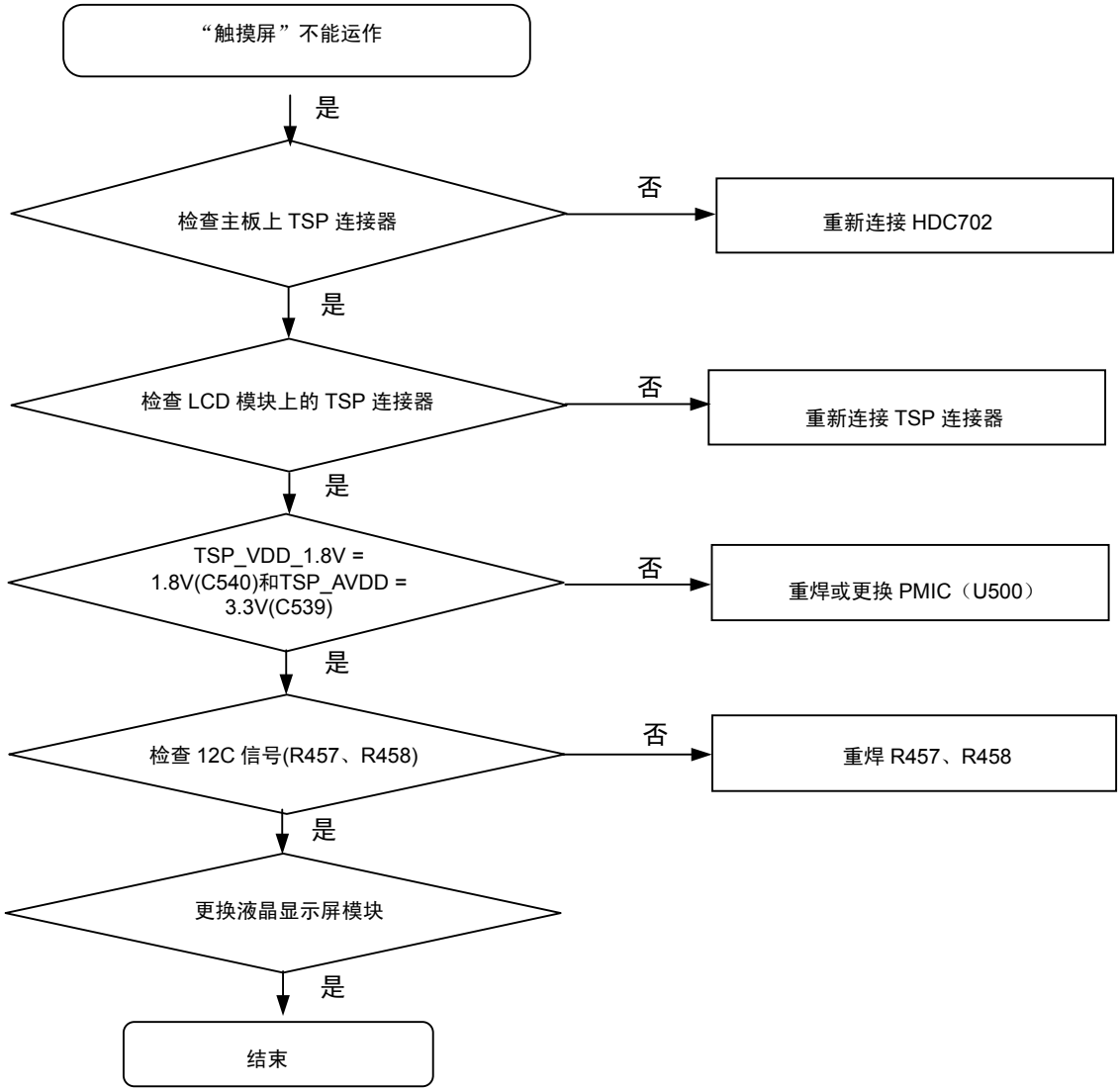

保密和所有权-本维修手册内容的变更恕不另行通知。
未经三星书面授权而发布，传送，或违背本文件中的任何内容或数据是严格禁止的。

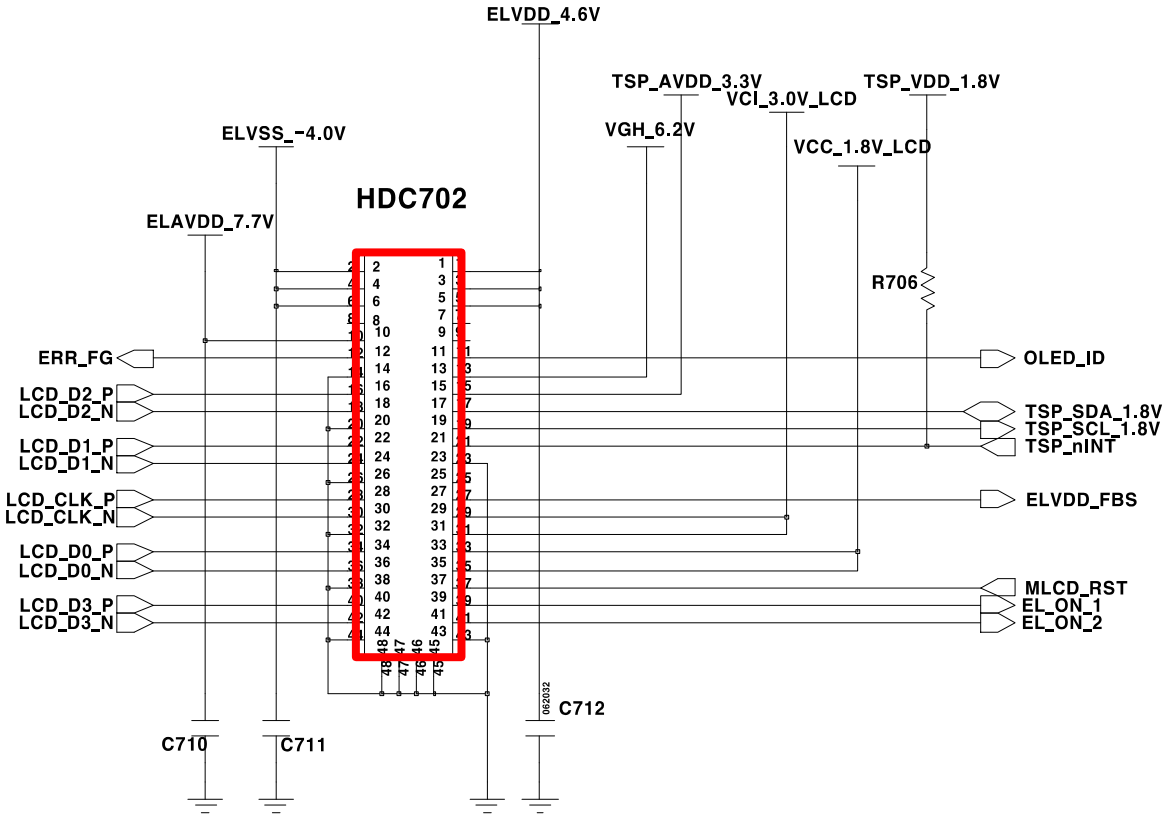

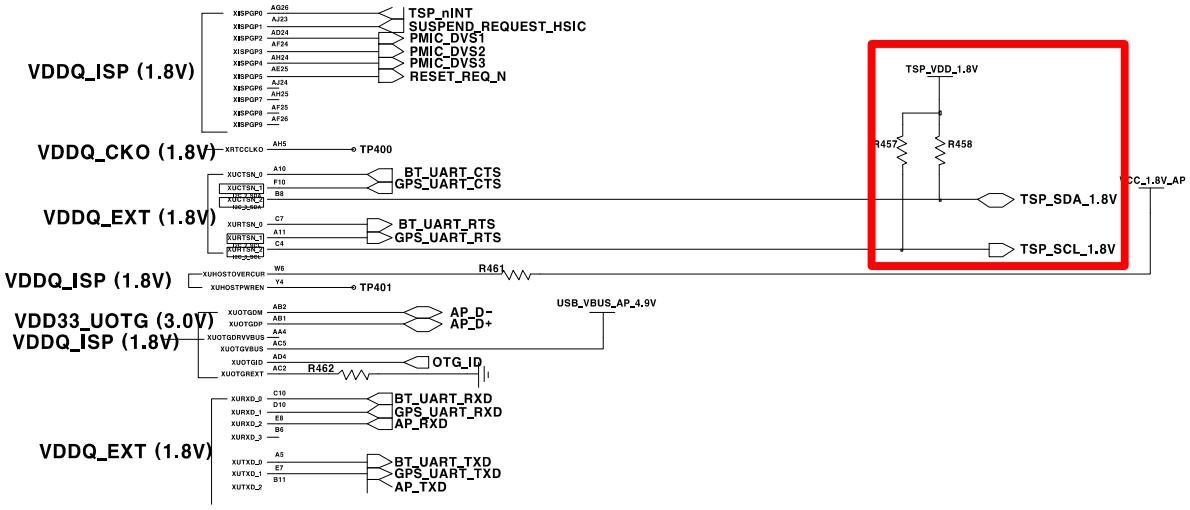

Confidential and proprietary-the contents in this service guide subject to change without prior notice.
Distribution, transmission, or infringement of any content or data from this document without Samsung's written authorization is strictly prohibited.

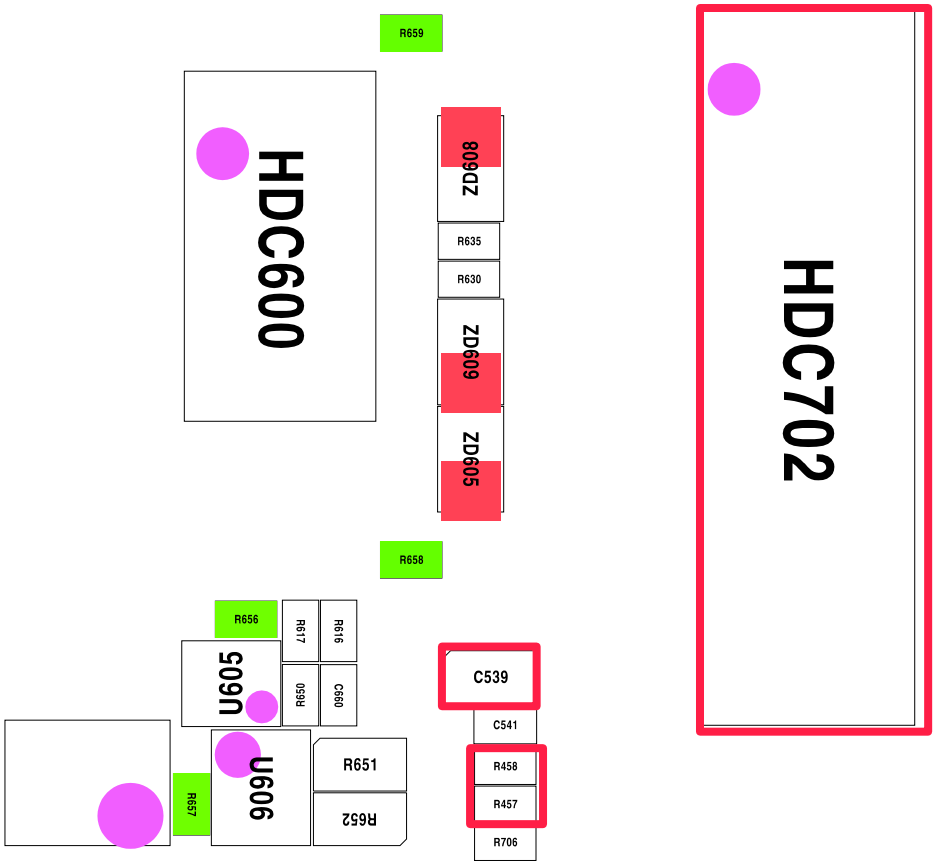

Confidential and proprietary-the contents in this service guide subject to change without prior notice.
Distribution, transmission, or infringement of any content or data from this document without Samsung's written authorization is strictly prohibited.

8-3-14.8M 摄像头

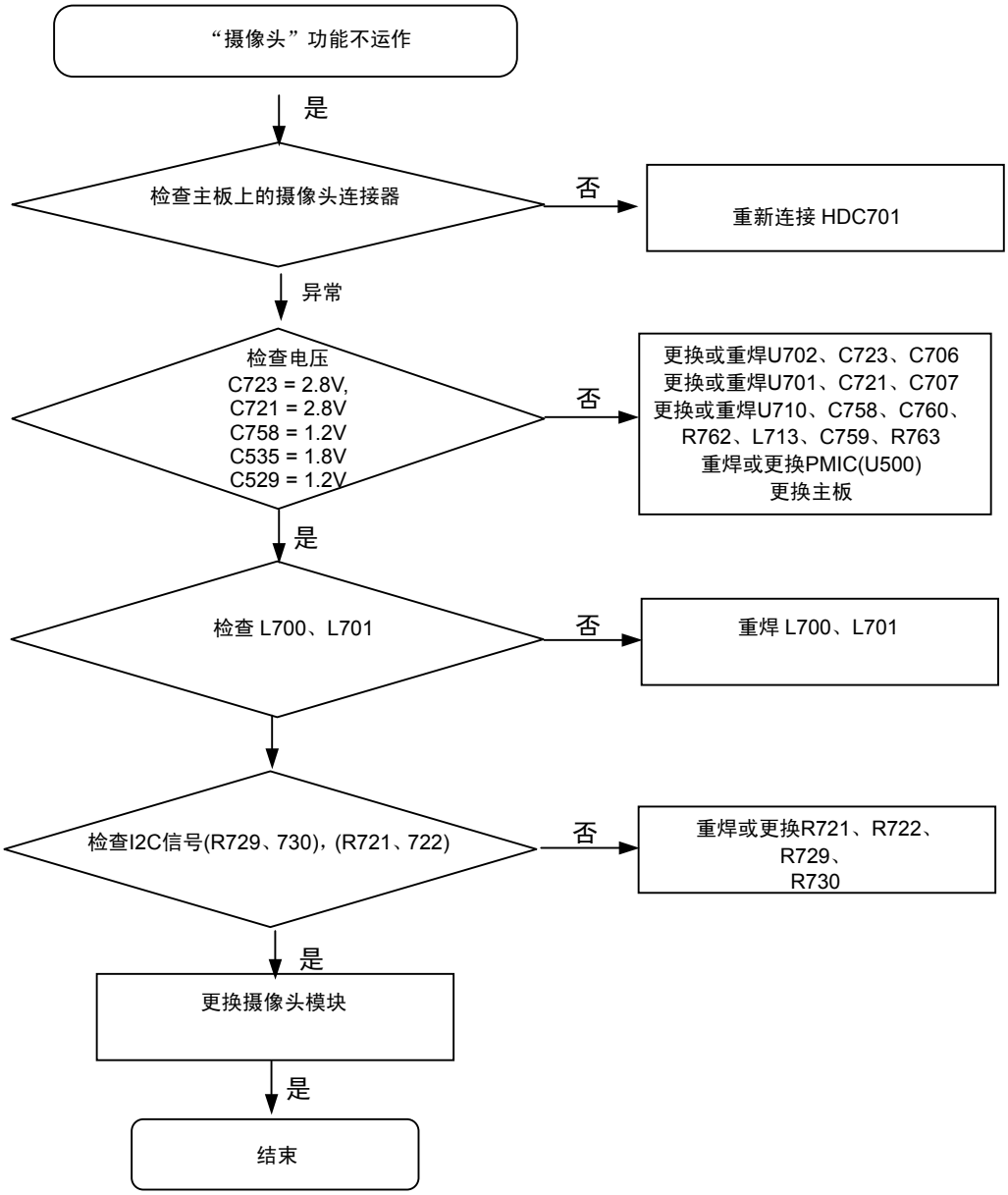

保密和所有权-本维修手册内容的变更恕不另行通知。
未经三星书面授权而发布，传送，或违背本文件中的任何内容或数据是严格禁止的。

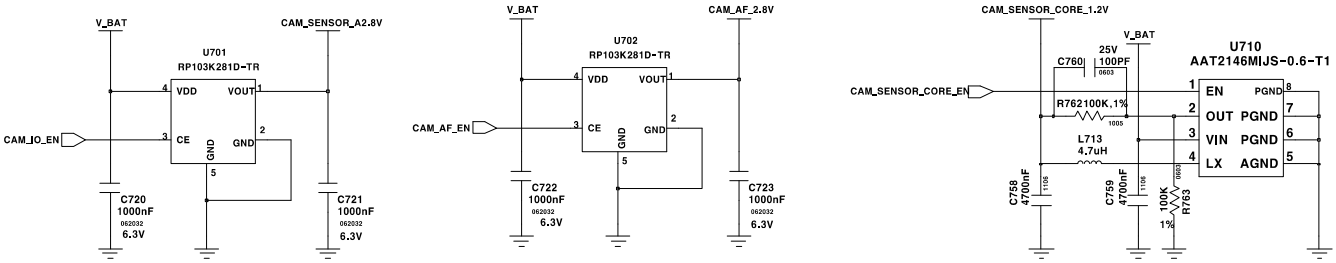

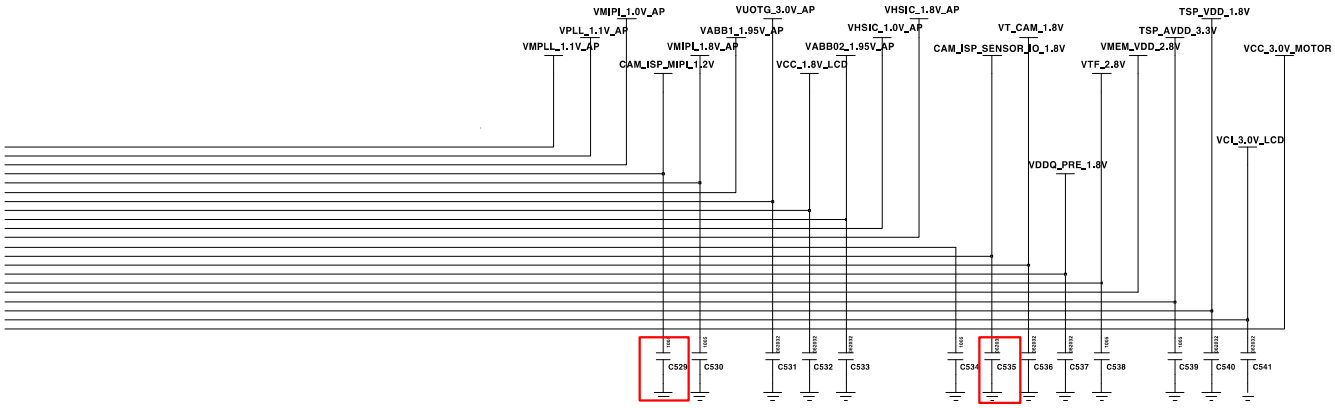

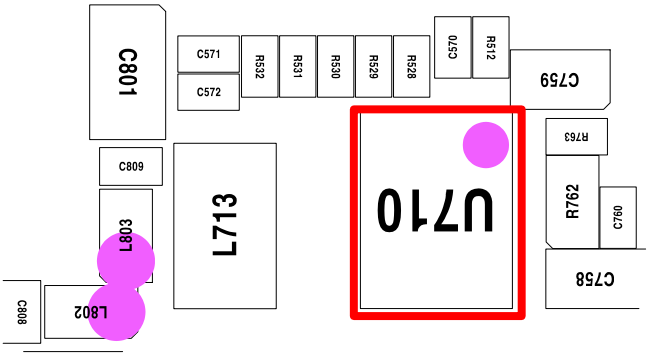

Confidential and proprietary-the contents in this service guide subject to change without prior notice.
Distribution, transmission, or infringement of any content or data from this document without Samsung's written authorization is strictly prohibited.

8-3-13.2M 摄像头

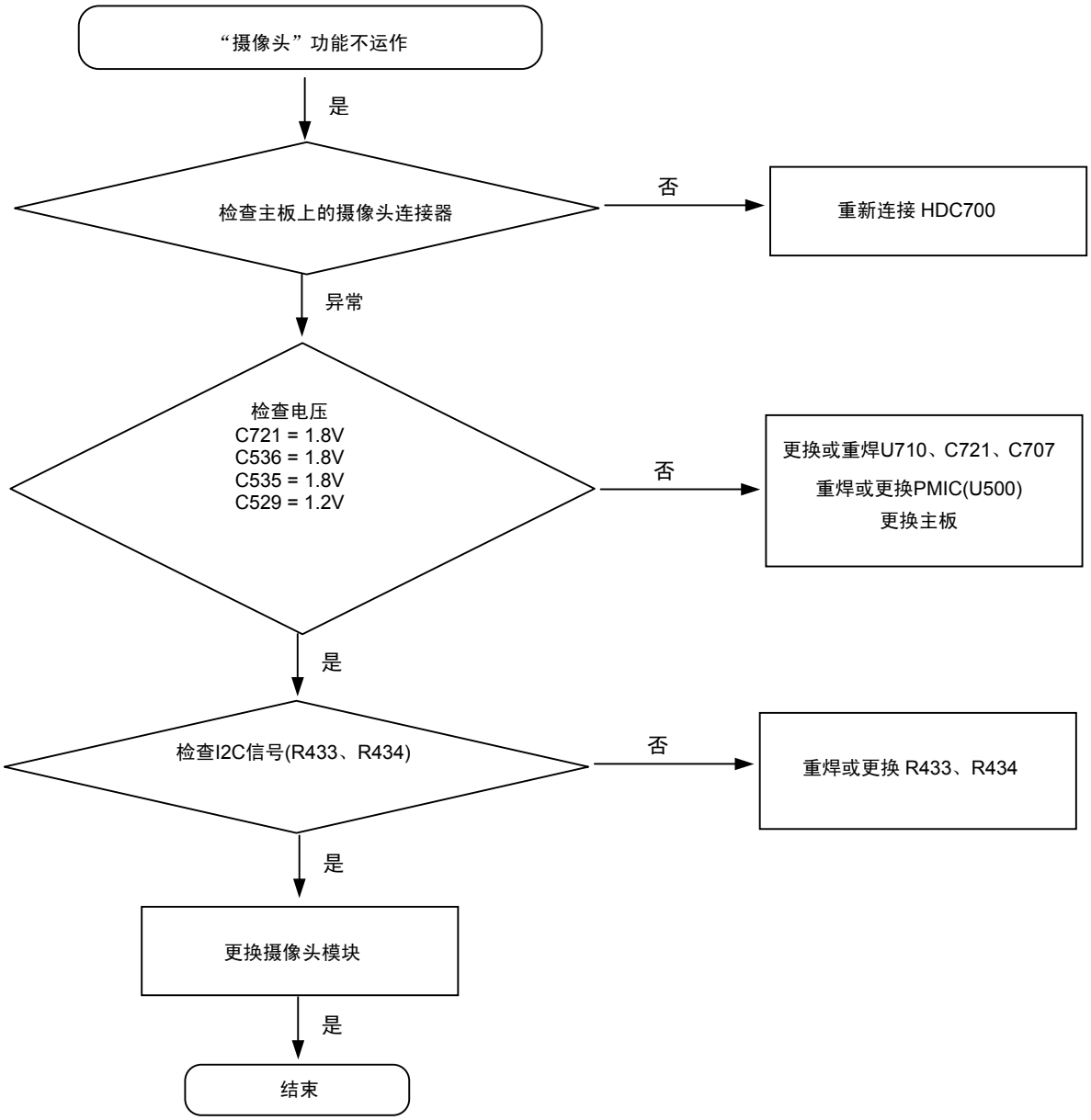

保密和所有权-本维修手册内容的变更恕不另行通知。
未经三星书面授权而发布，传送，或违背本文件中的任何内容或数据是严格禁止的。

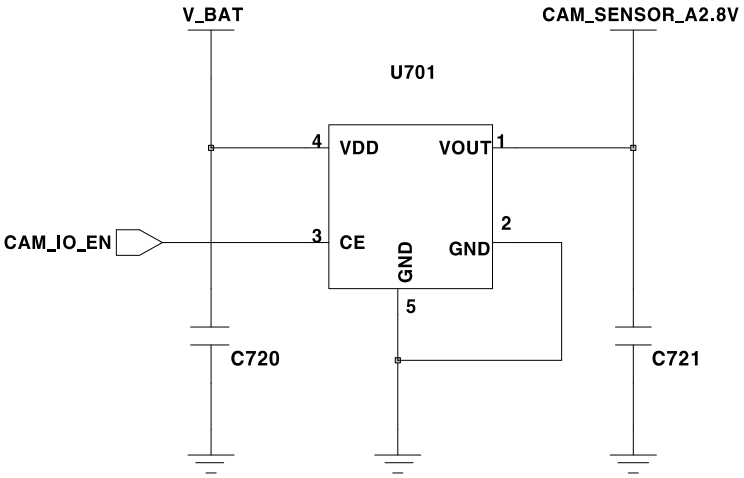

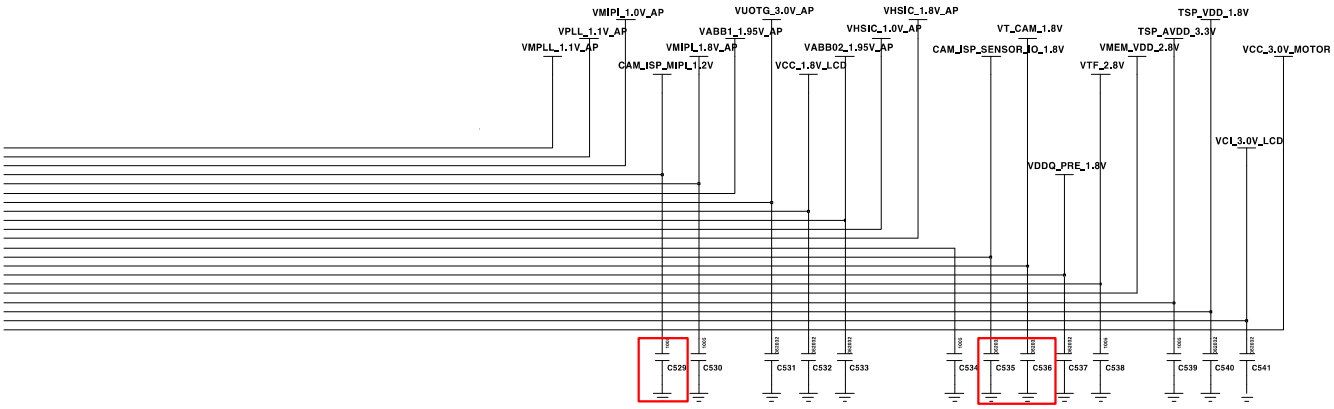

Confidential and proprietary-the contents in this service guide subject to change without prior notice.
Distribution, transmission, or infringement of any content or data from this document without Samsung's written authorization is strictly prohibited.

8-3-16.GSM1800 接收器

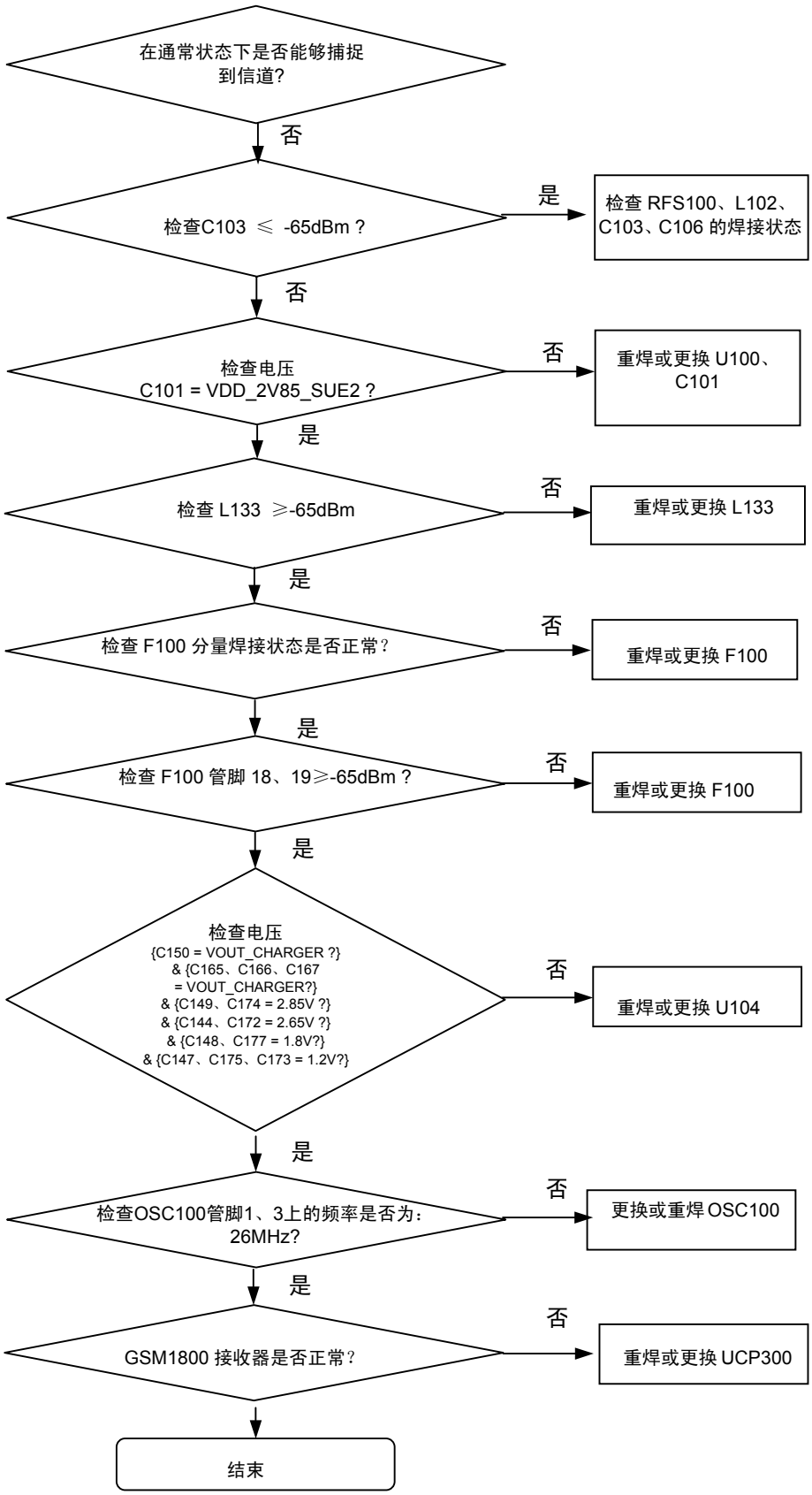

保密和所有权-本维修手册内容的变更恕不另行通知。
未经三星书面授权而发布，传送，或违背本文件中的任何内容或数据是严格禁止的。

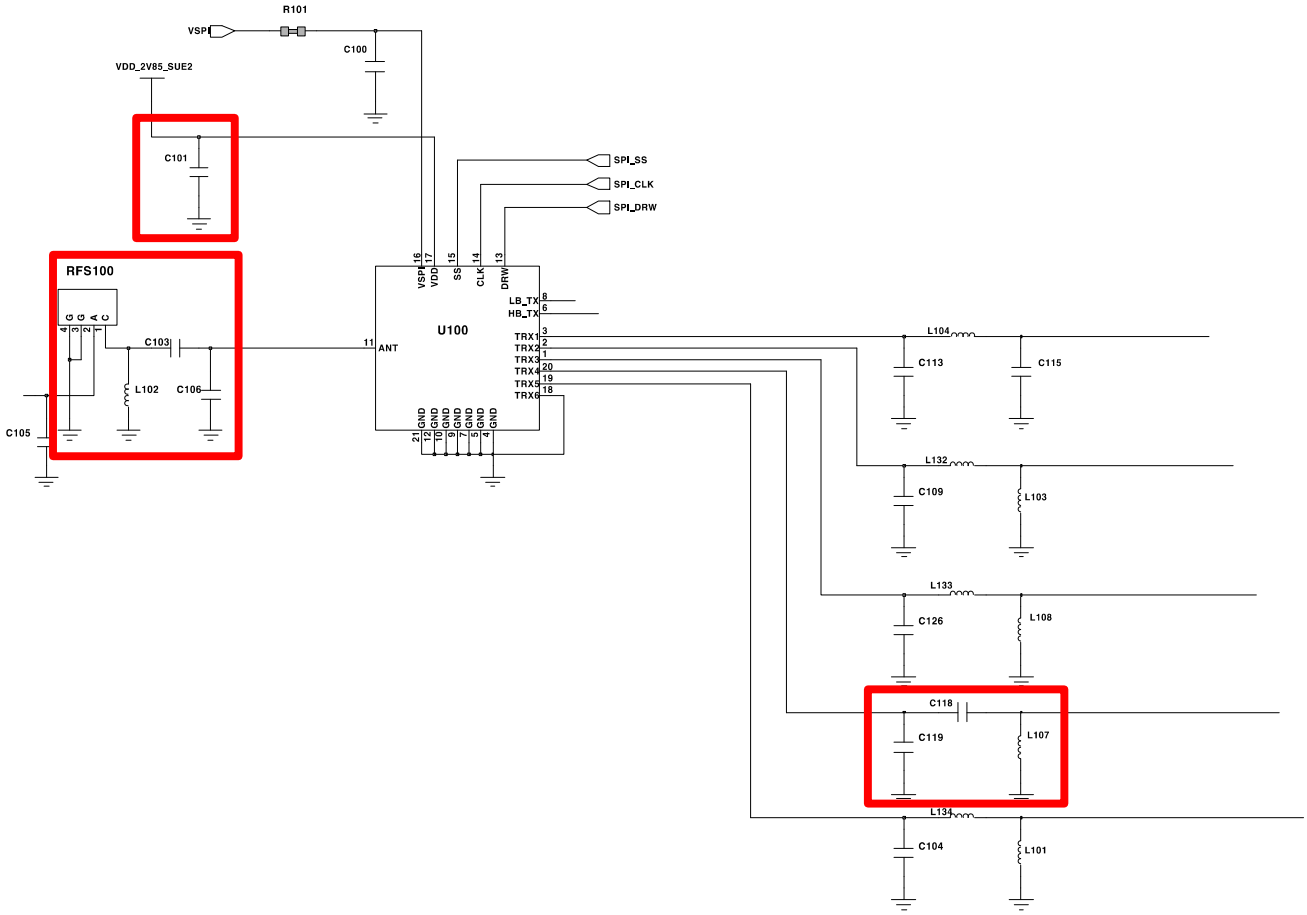

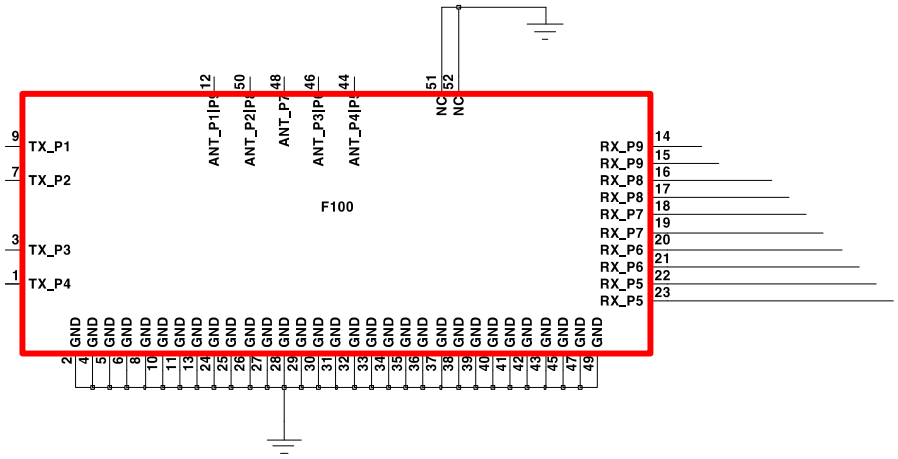

Confidential and proprietary-the contents in this service guide subject to change without prior notice.
Distribution, transmission, or infringement of any content or data from this document without Samsung's written authorization is strictly prohibited.

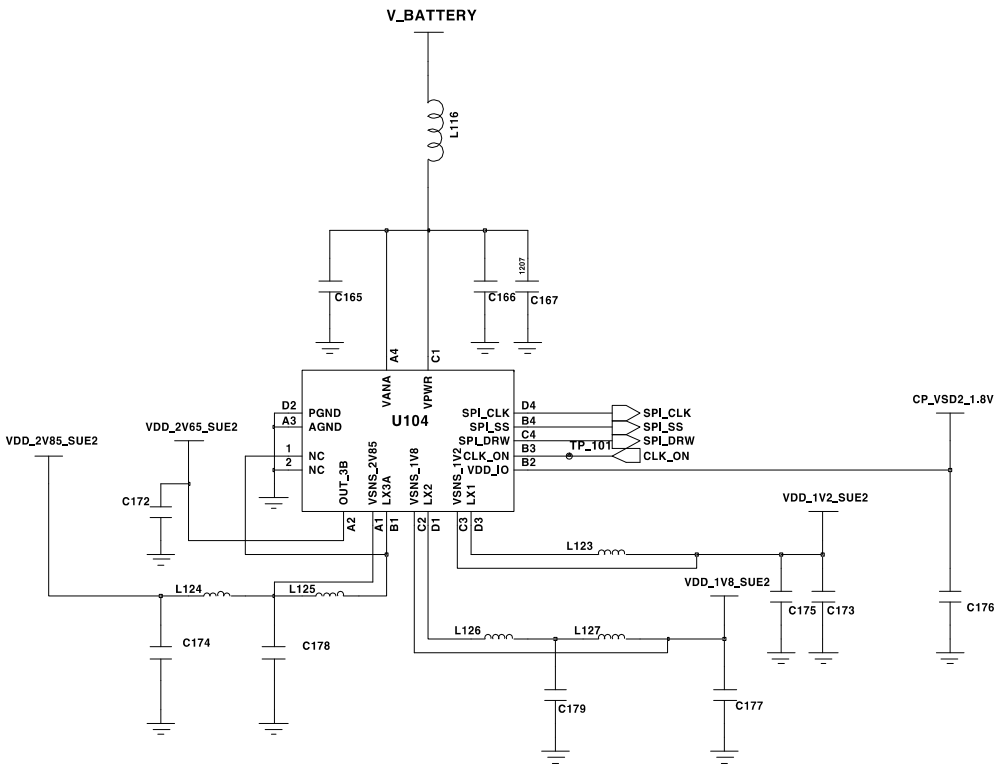

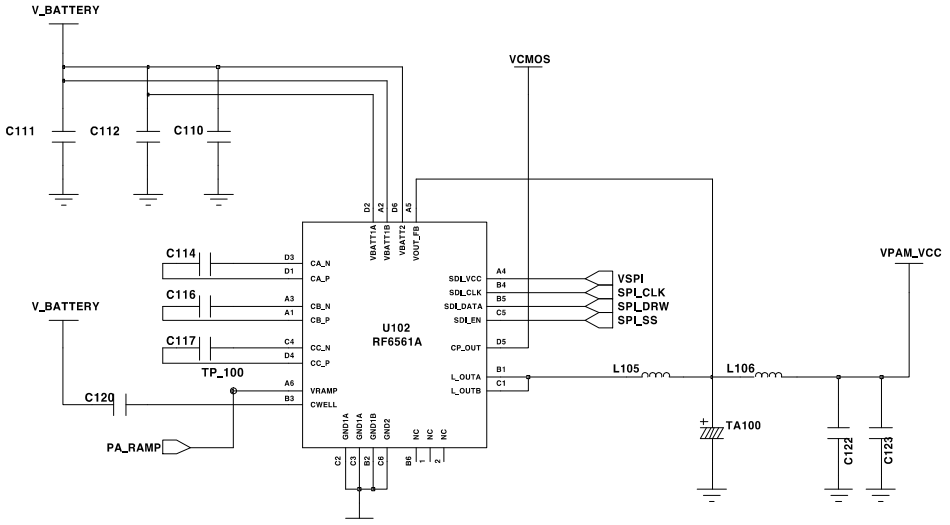

Confidential and proprietary-the contents in this service guide subject to change without prior notice.
Distribution, transmission, or infringement of any content or data from this document without Samsung's written authorization is strictly prohibited.

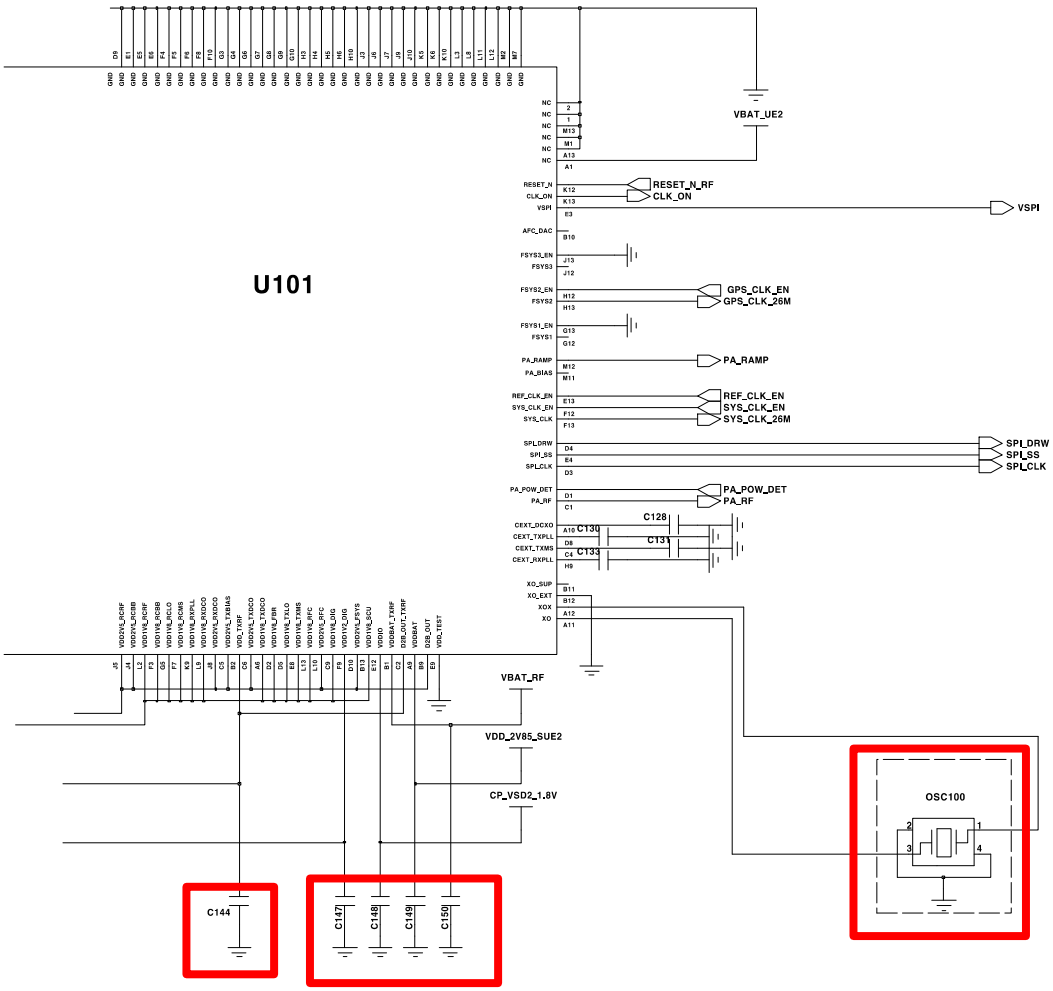

Confidential and proprietary-the contents in this service guide subject to change without prior notice.
Distribution, transmission, or infringement of any content or data from this document without Samsung's written authorization is strictly prohibited.

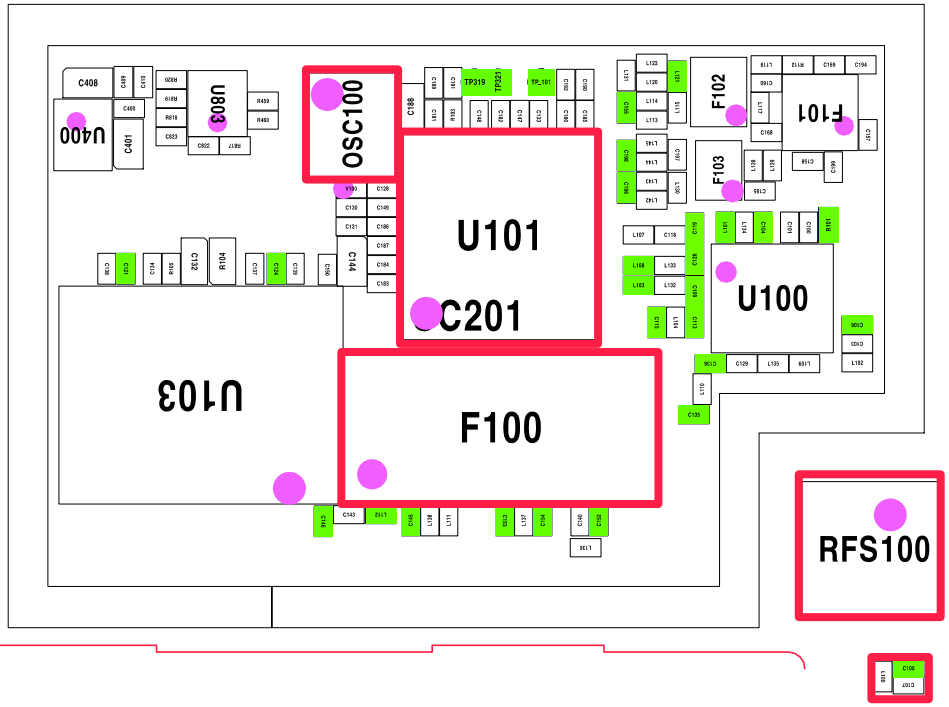

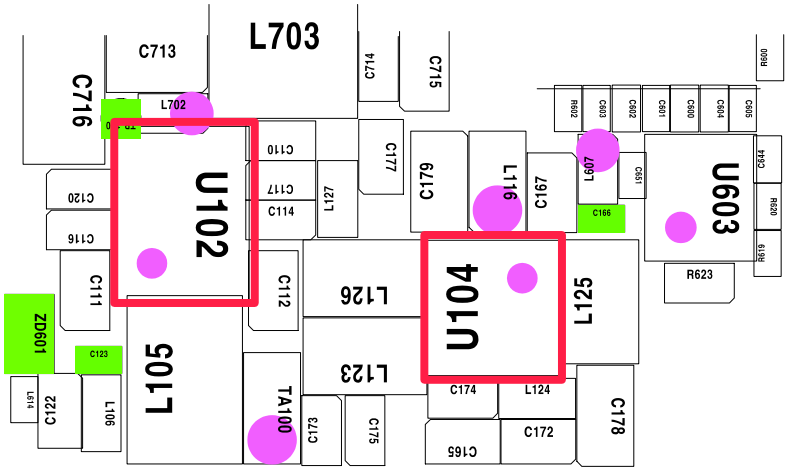

Confidential and proprietary-the contents in this service guide subject to change without prior notice.
Distribution, transmission, or infringement of any content or data from this document without Samsung's written authorization is strictly prohibited.

8-3-17.WCDMA Band1 接收器

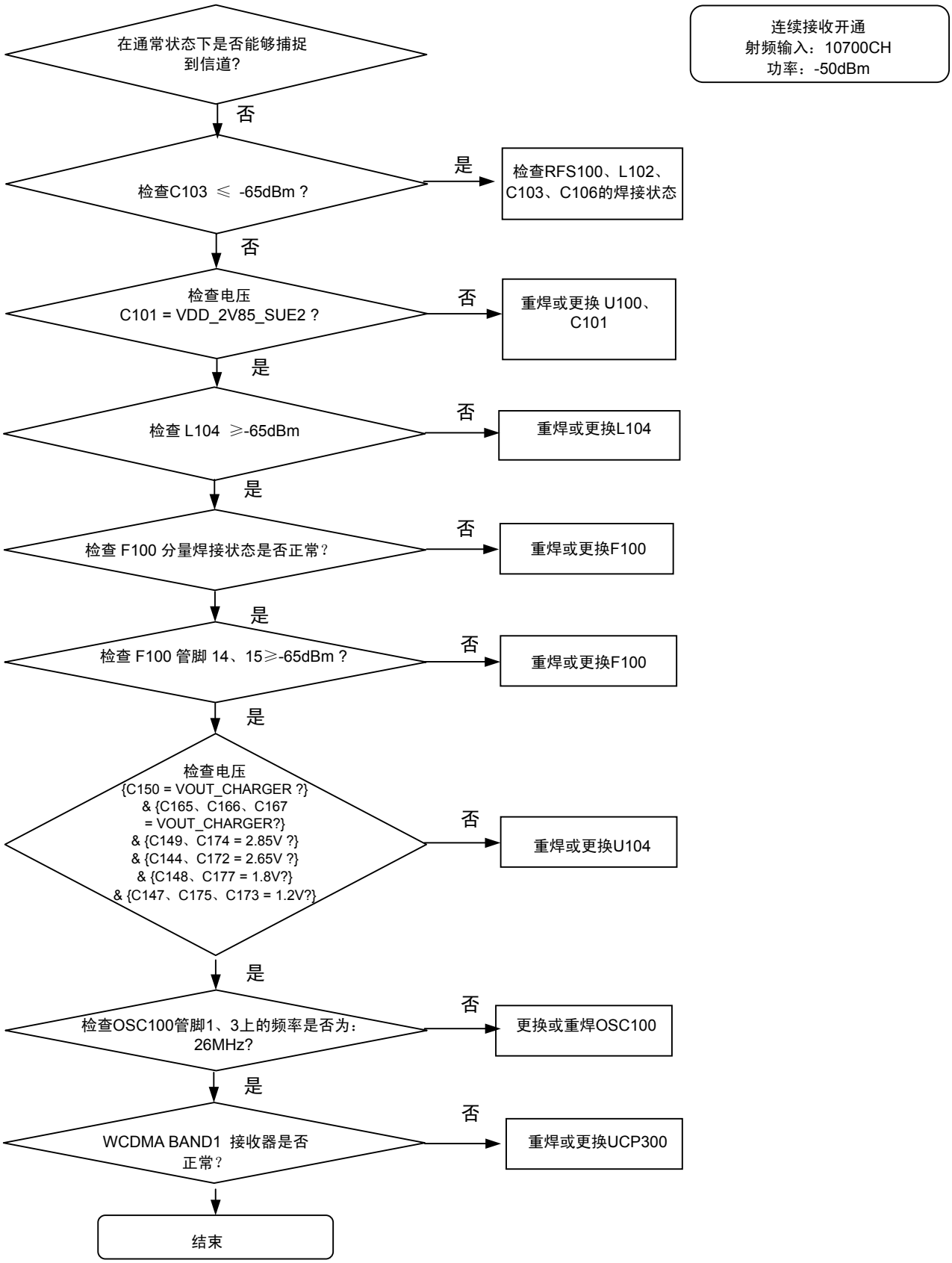

保密和所有权-本维修手册内容的变更恕不另行通知。
未经三星书面授权而发布，传送，或违背本文件中的任何内容或数据是严格禁止的。

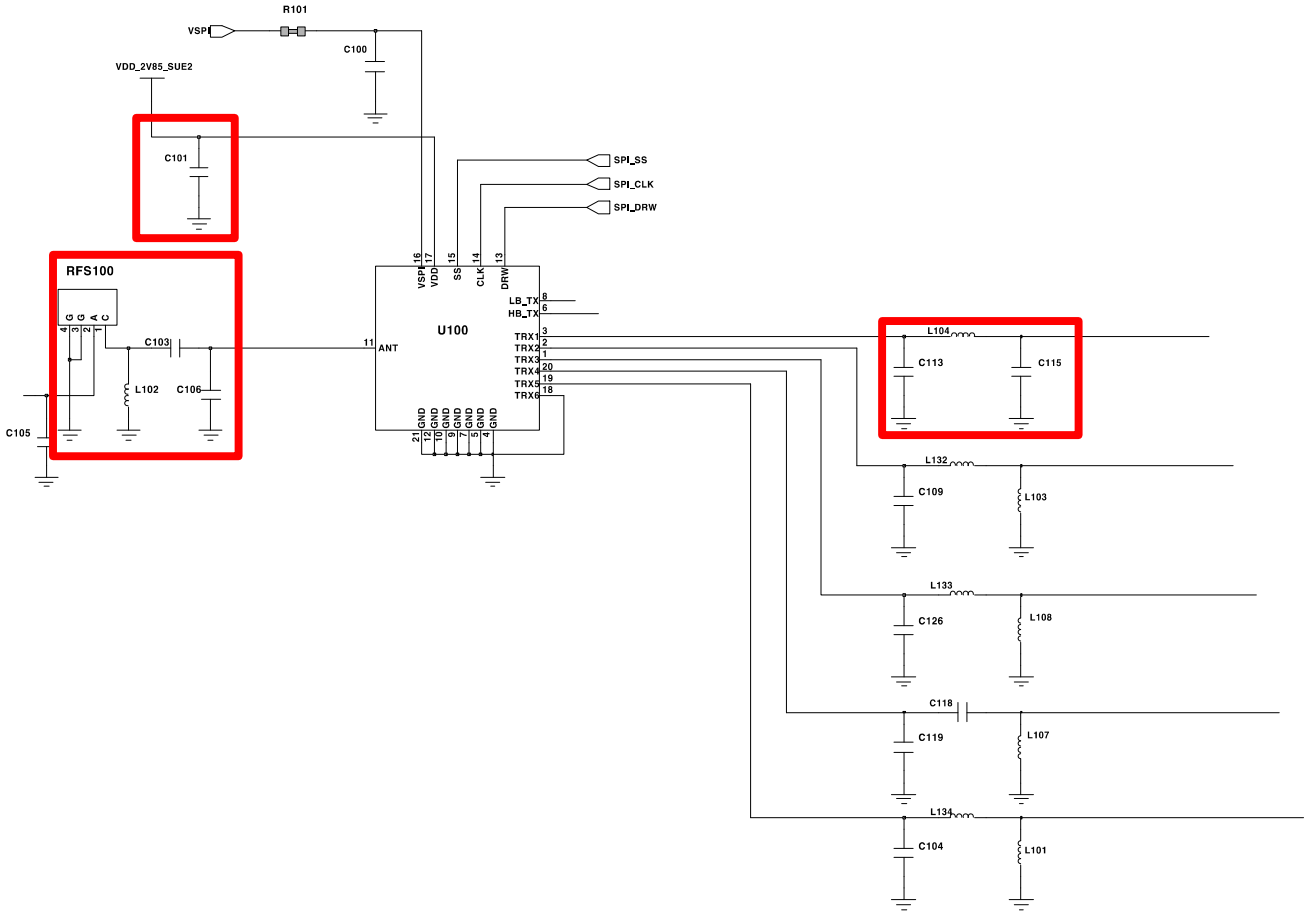

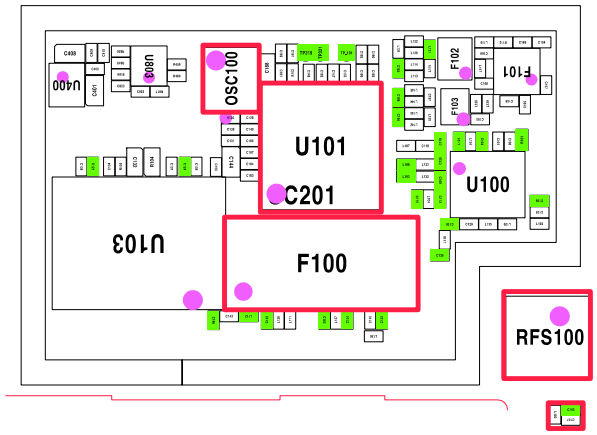

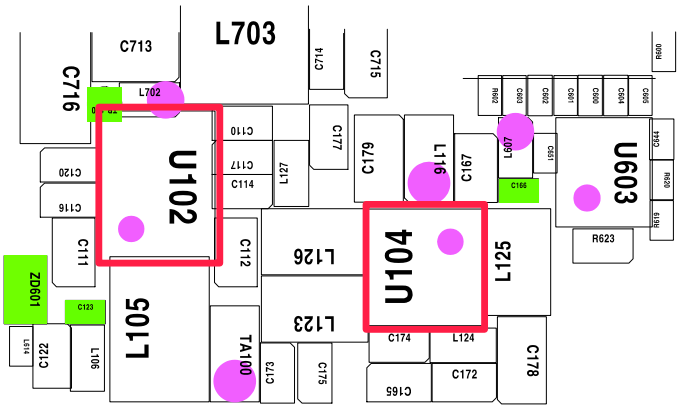

Confidential and proprietary-the contents in this service guide subject to change without prior notice.
Distribution, transmission, or infringement of any content or data from this document without Samsung's written authorization is strictly prohibited.

8-3-14.WCDMA Band2/GSM1900 接收器

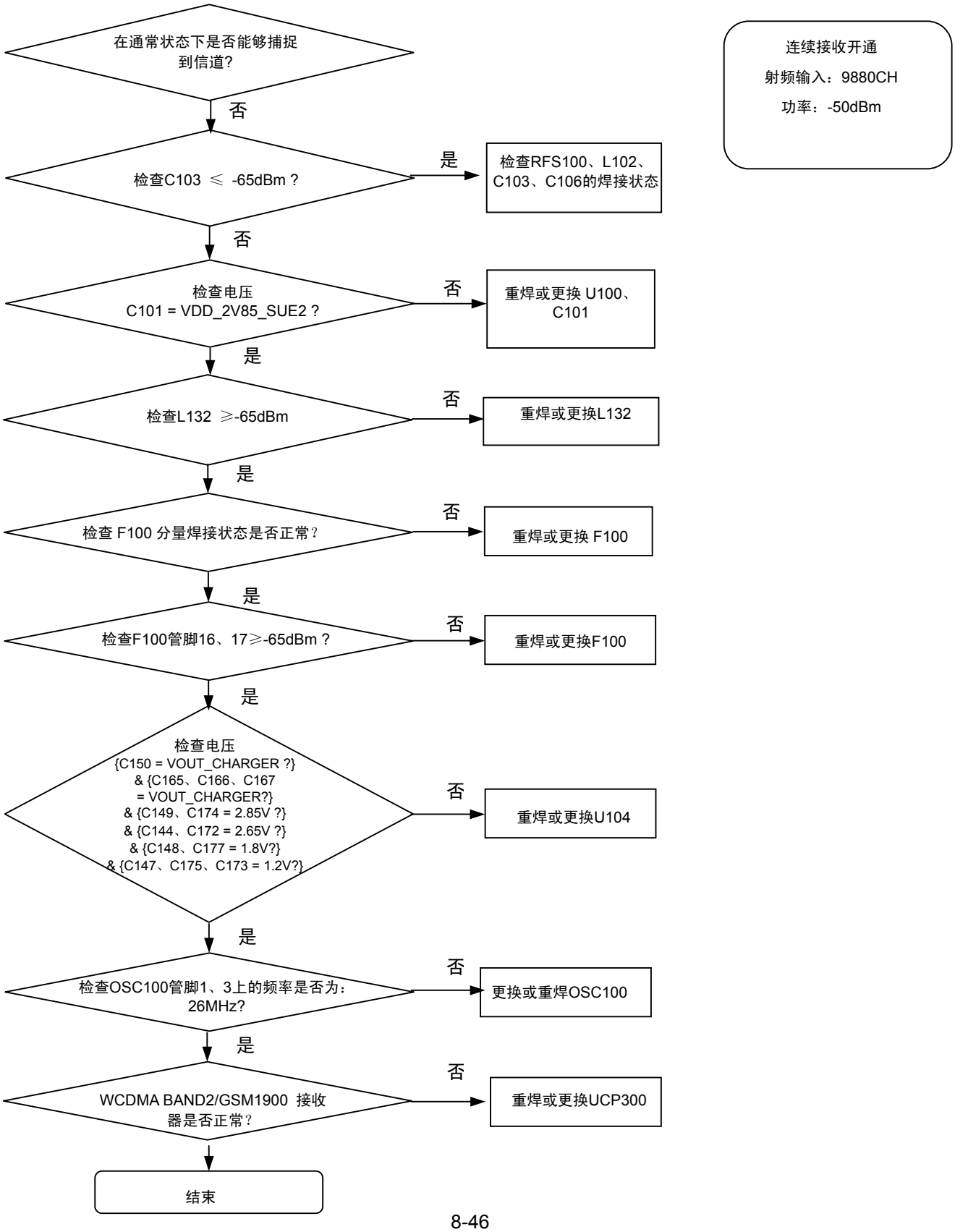

保密和所有权-本维修手册内容的变更恕不另行通知。
未经三星书面授权而发布，传送，或违背本文件中的任何内容或数据是严格禁止的。

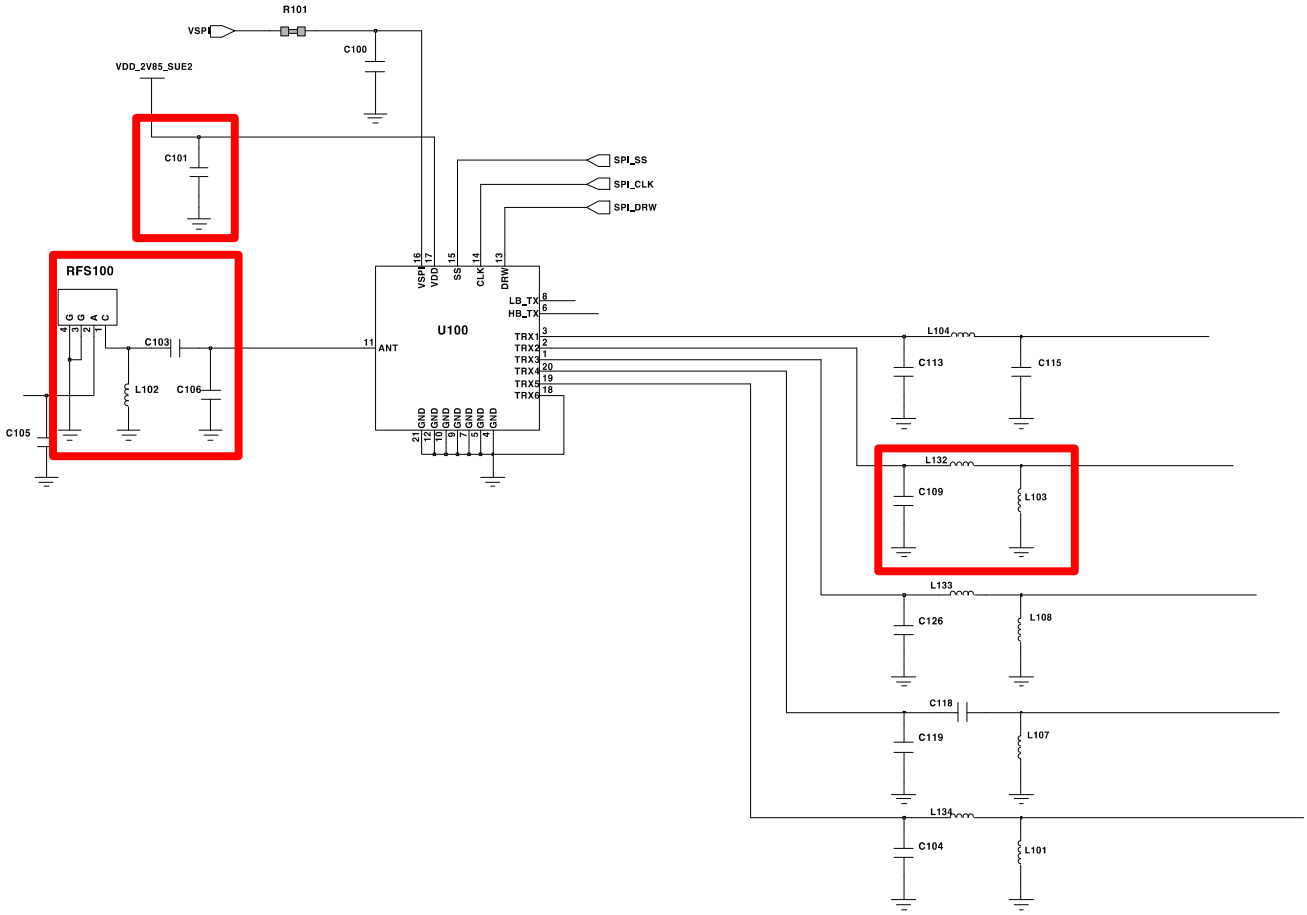

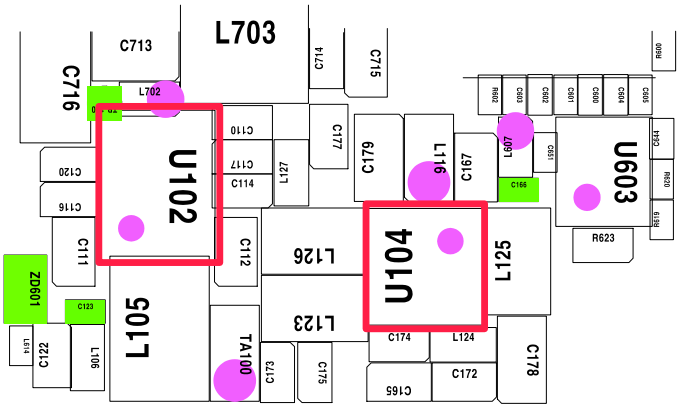

Confidential and proprietary-the contents in this service guide subject to change without prior notice.
Distribution, transmission, or infringement of any content or data from this document without Samsung's written authorization is strictly prohibited.

8-3-18.WCDMA Band5/GSM850 接收器

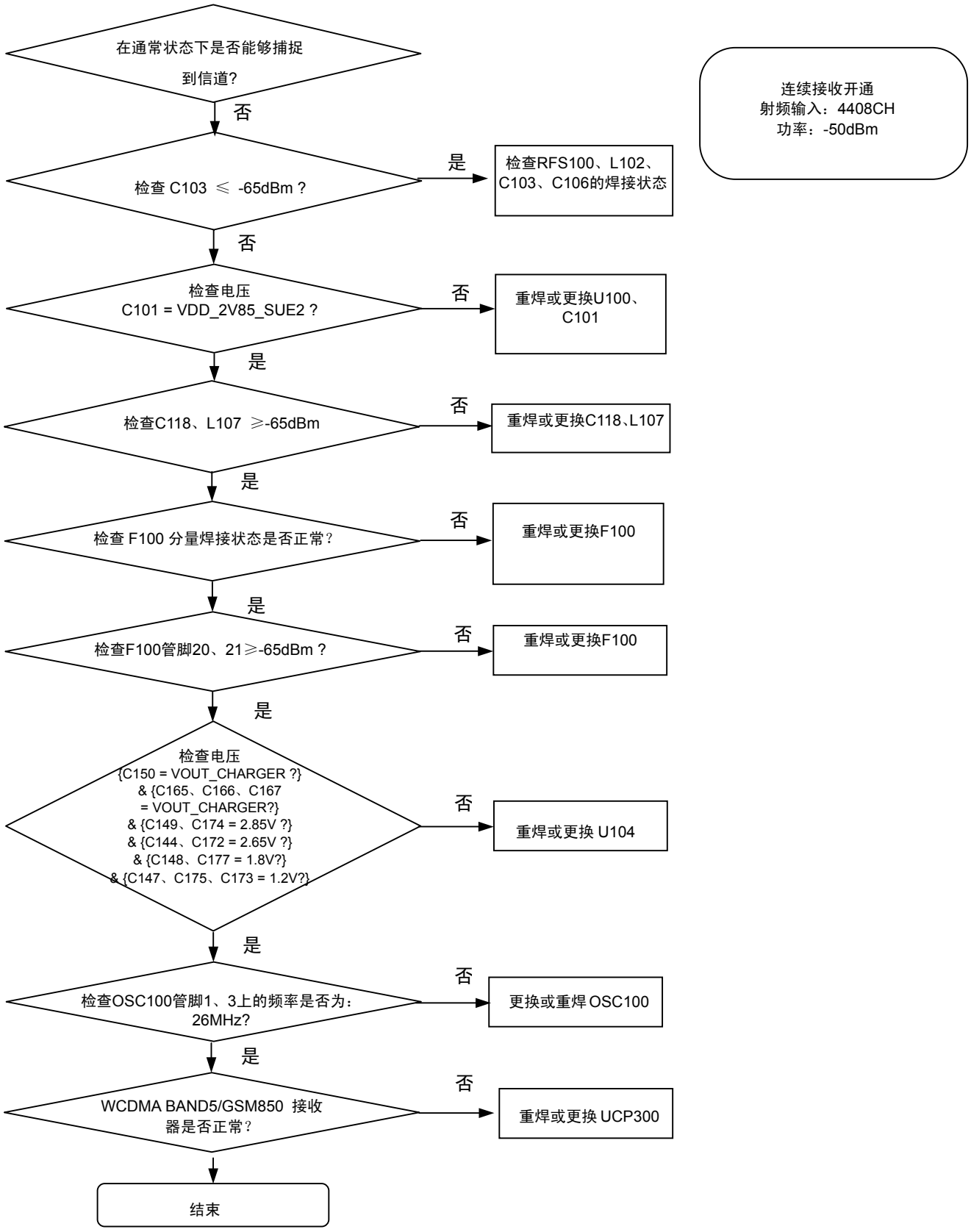

保密和所有权-本维修手册内容的变更恕不另行通知。
未经三星书面授权而发布，传送，或违背本文件中的任何内容或数据是严格禁止的。

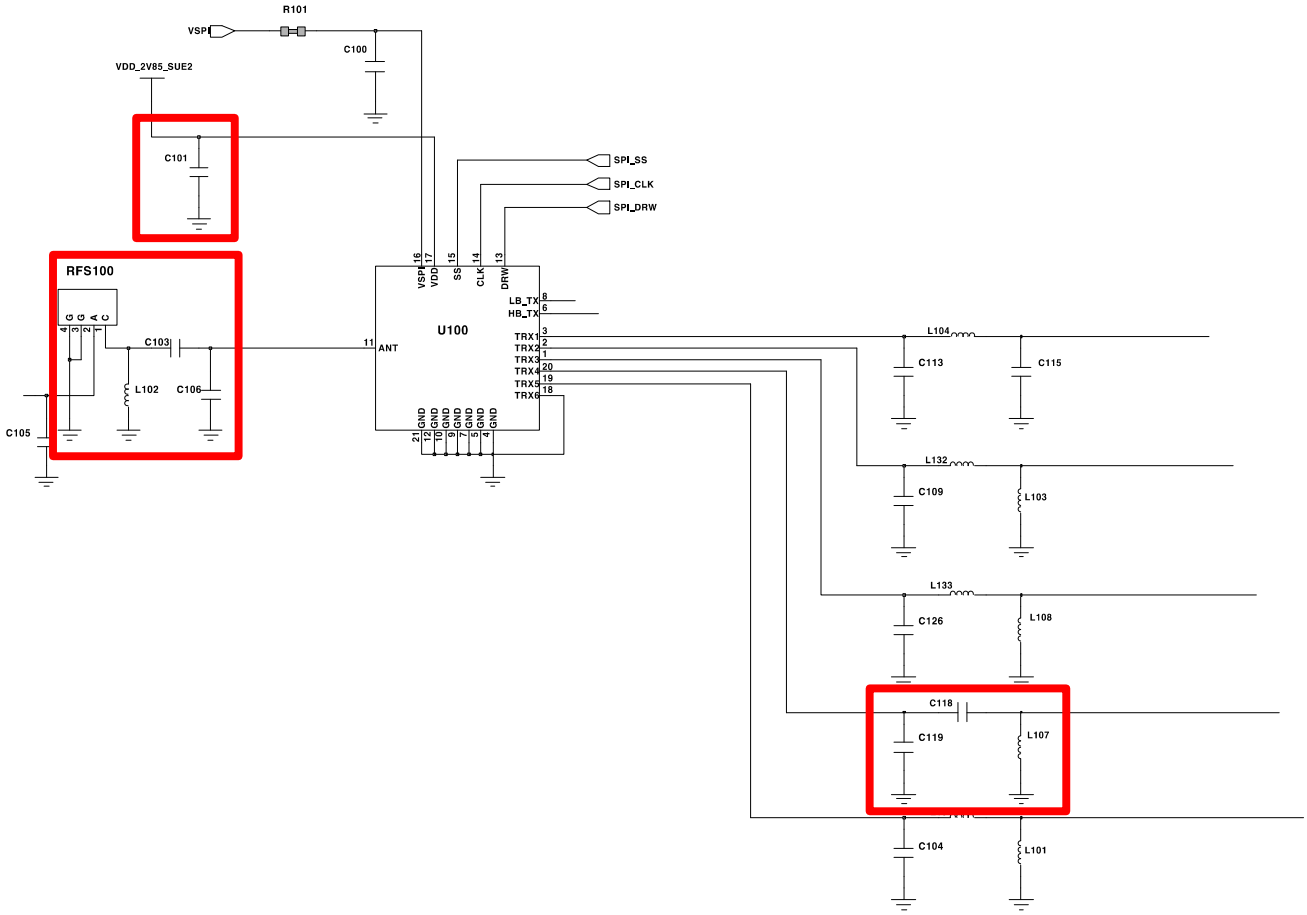

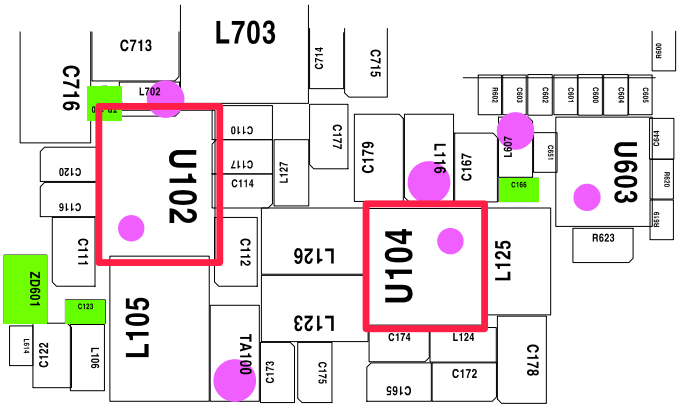

Confidential and proprietary-the contents in this service guide subject to change without prior notice.
Distribution, transmission, or infringement of any content or data from this document without Samsung's written authorization is strictly prohibited.

8-3-19.WCDMA Band8/GSM900 接收器

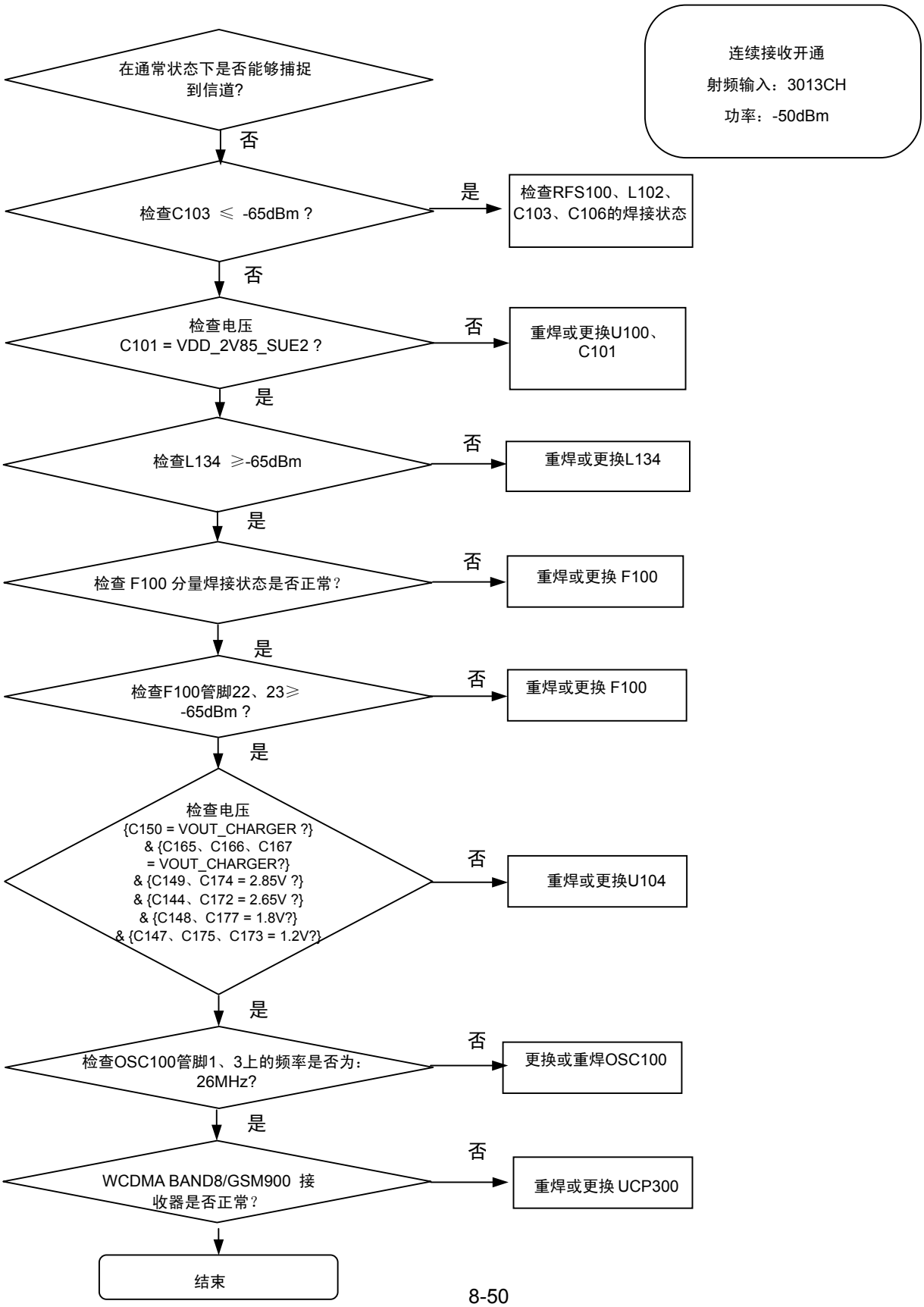

保密和所有权-本维修手册内容的变更恕不另行通知。
未经三星书面授权而发布，传送，或违背本文件中的任何内容或数据是严格禁止的。

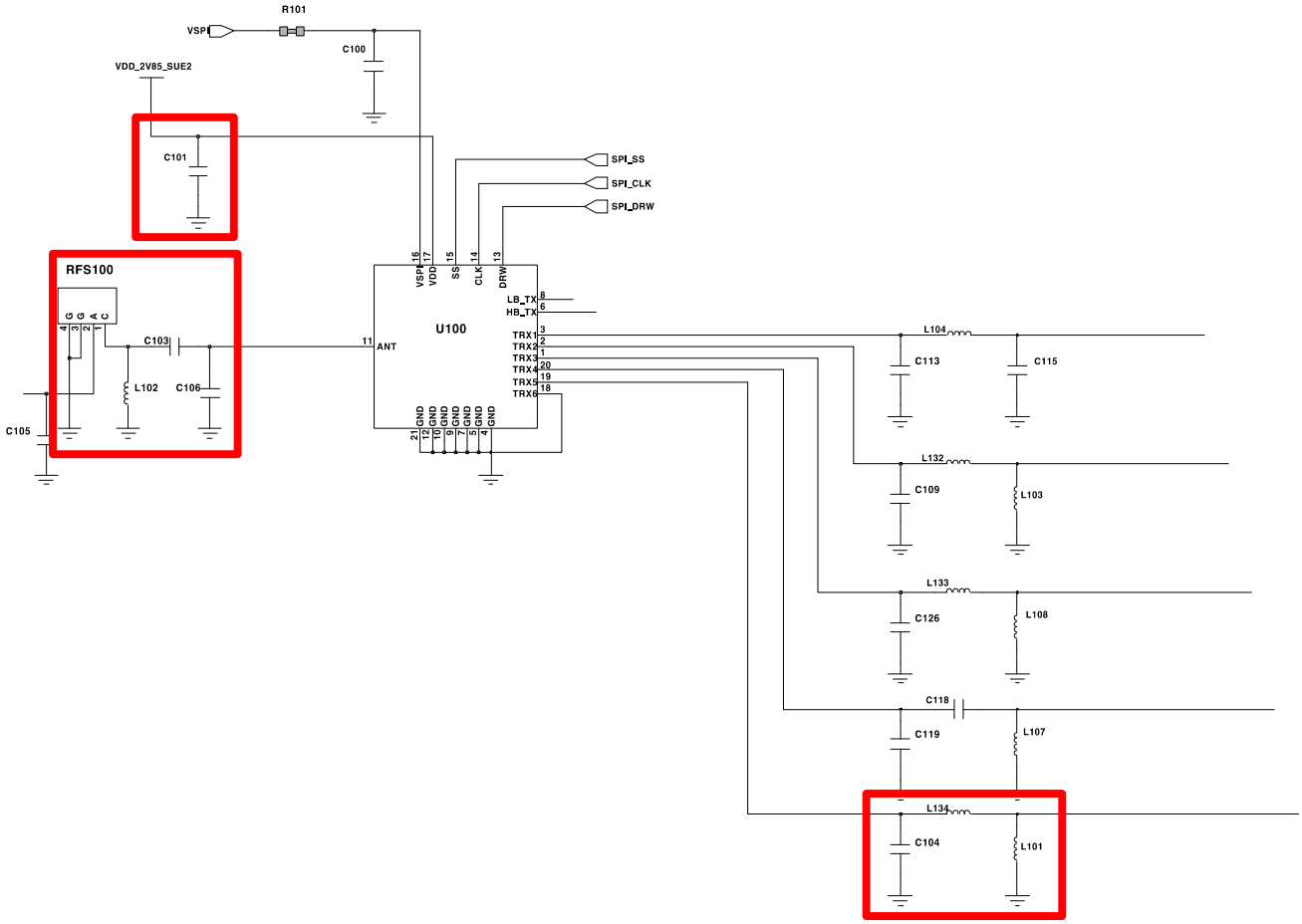

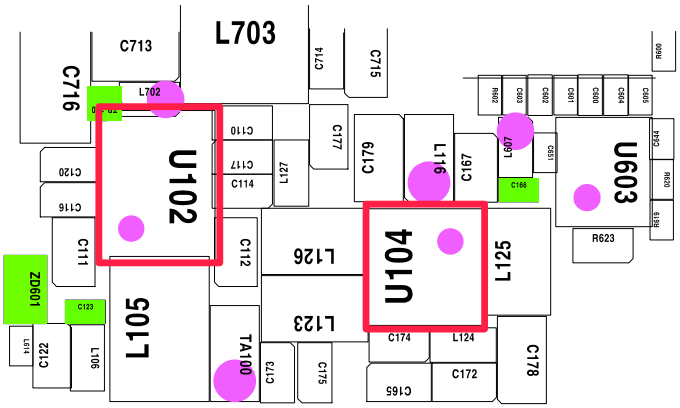

Confidential and proprietary-the contents in this service guide subject to change without prior notice.
Distribution, transmission, or infringement of any content or data from this document without Samsung's written authorization is strictly prohibited.

8-3-20.GSM850/GSM900 发射器

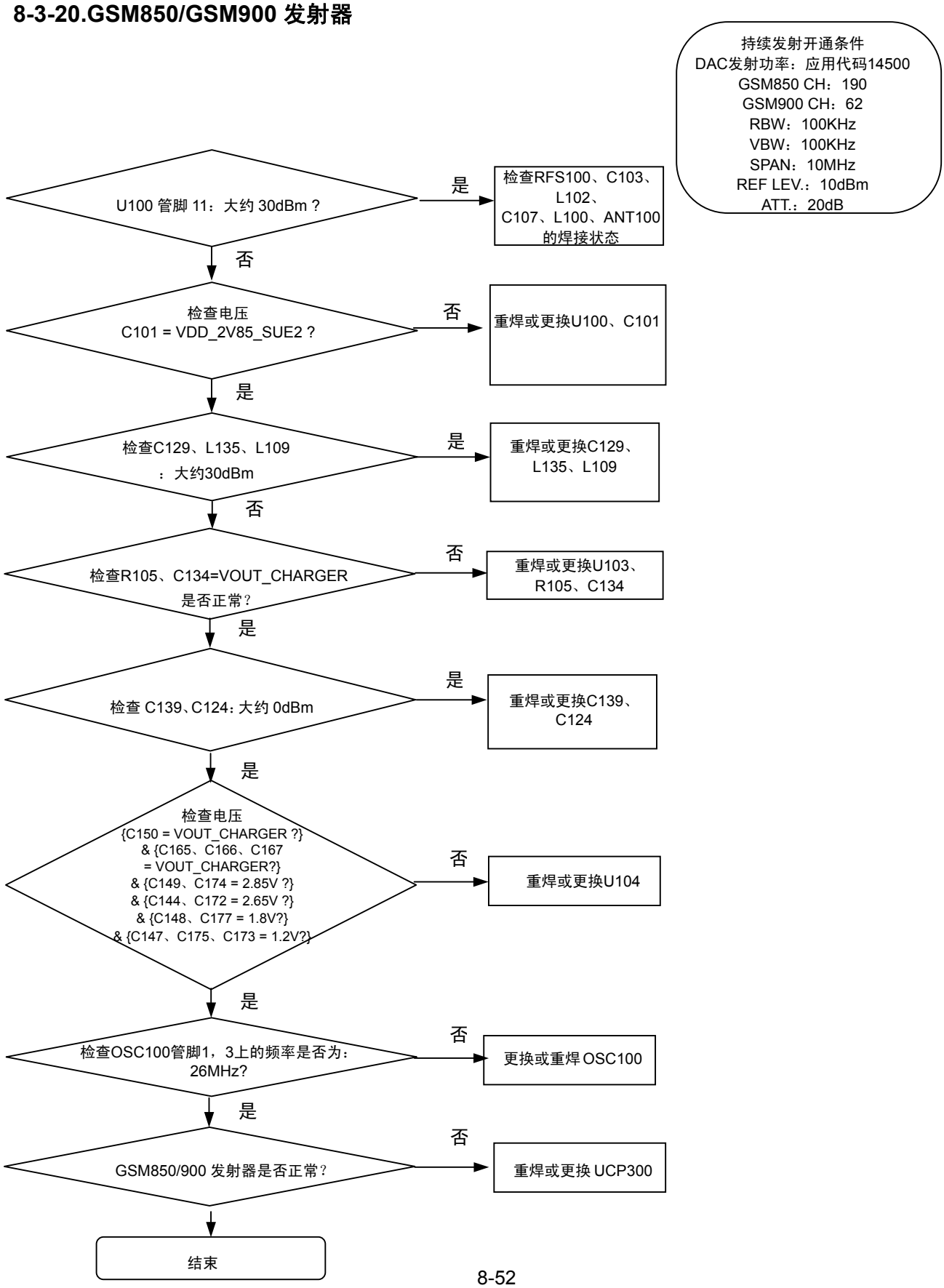

保密和所有权-本维修手册内容的变更恕不另行通知。
未经三星书面授权而发布，传送，或违背本文件中的任何内容或数据是严格禁止的。

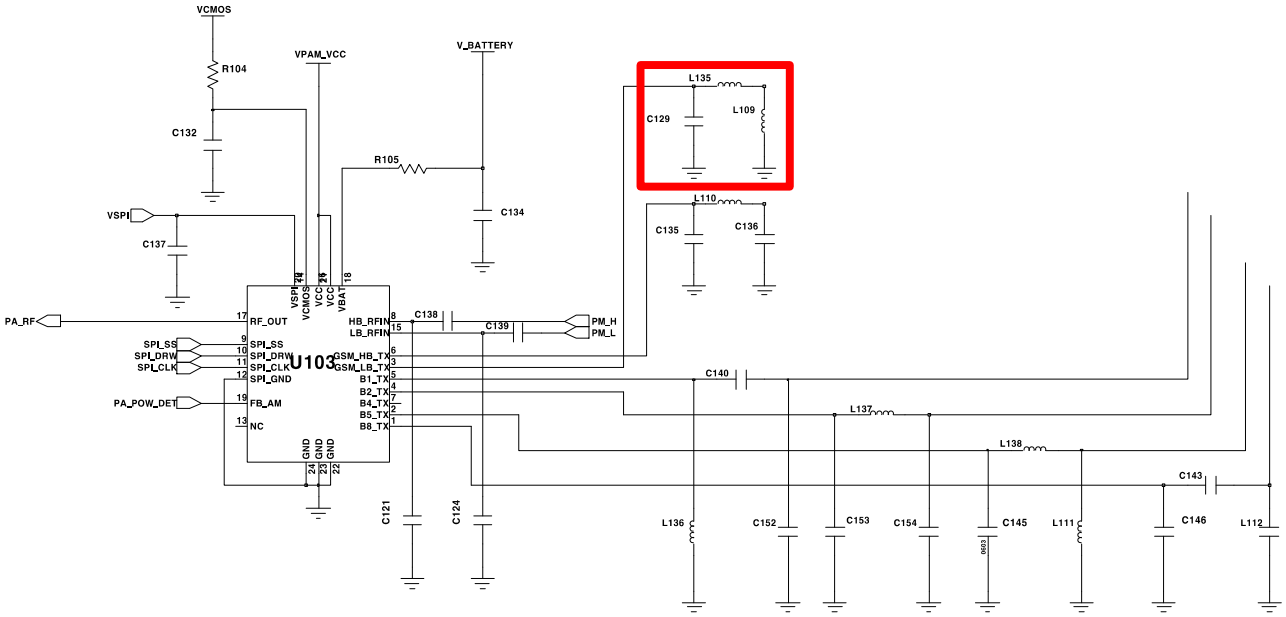

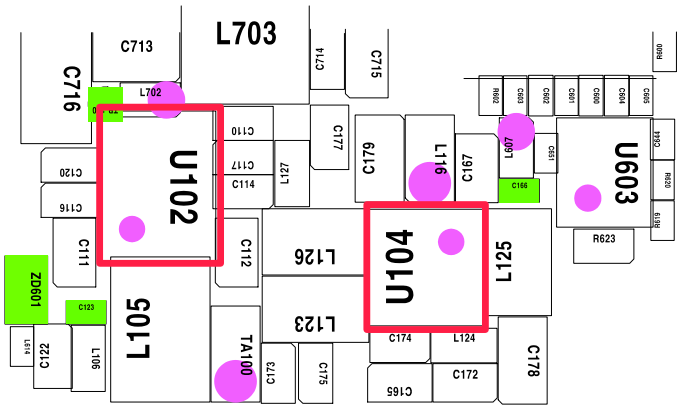

Confidential and proprietary-the contents in this service guide subject to change without prior notice.
Distribution, transmission, or infringement of any content or data from this document without Samsung's written authorization is strictly prohibited.

8-3-21.DCS/PCS 发射器

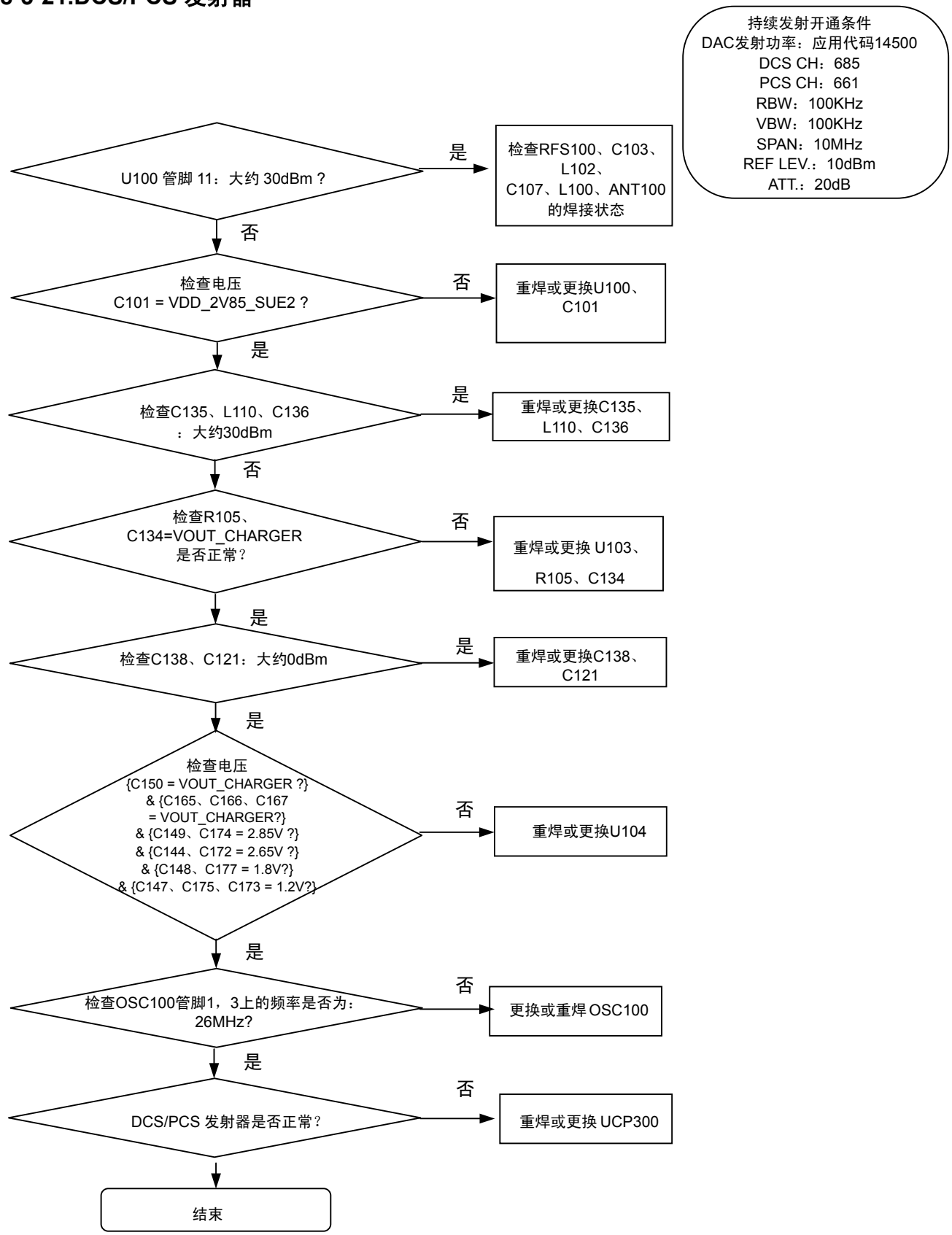

保密和所有权-本维修手册内容的变更恕不另行通知。
未经三星书面授权而发布，传送，或违背本文件中的任何内容或数据是严格禁止的。

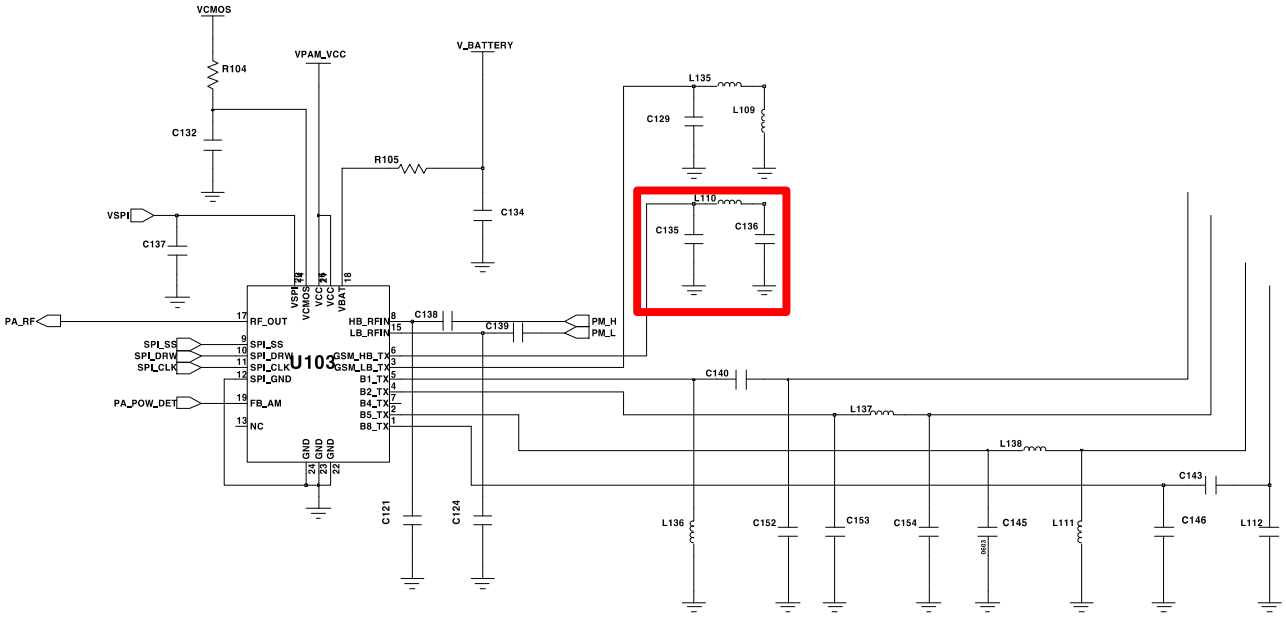

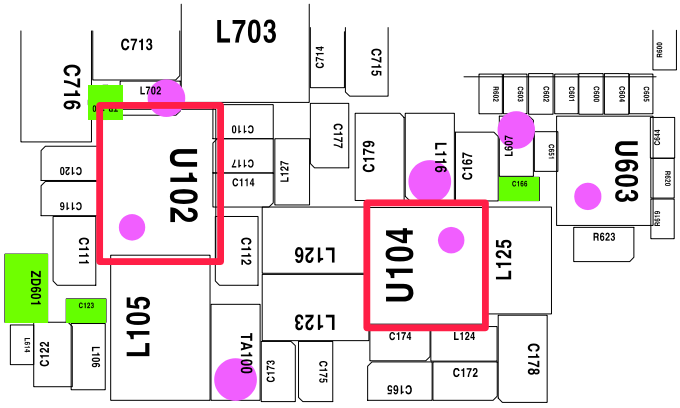

Confidential and proprietary-the contents in this service guide subject to change without prior notice.
Distribution, transmission, or infringement of any content or data from this document without Samsung's written authorization is strictly prohibited.

8-3-22.WCDMA BAND1 发射器

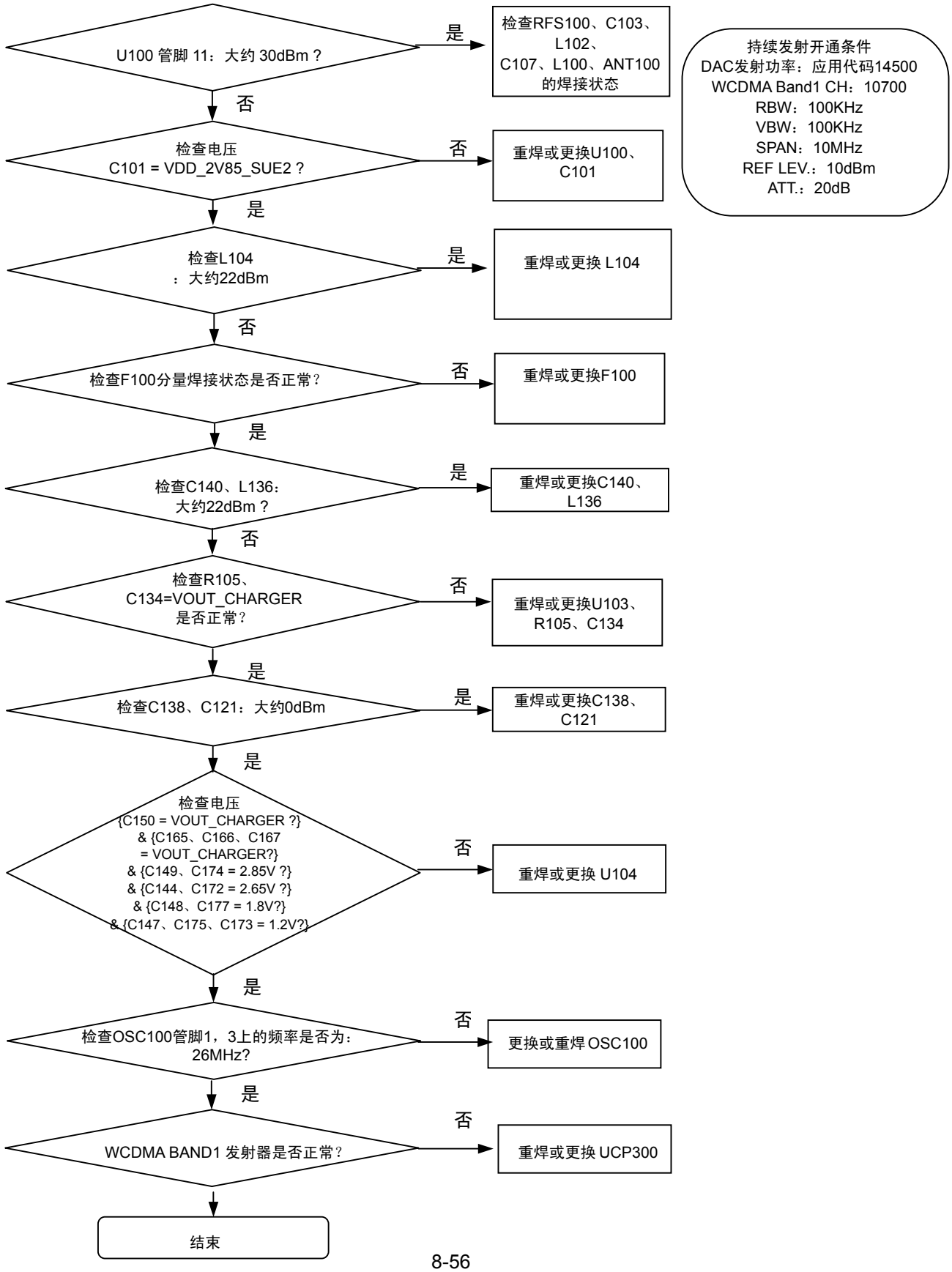

保密和所有权-本维修手册内容的变更恕不另行通知。
未经三星书面授权而发布，传送，或违背本文件中的任何内容或数据是严格禁止的。

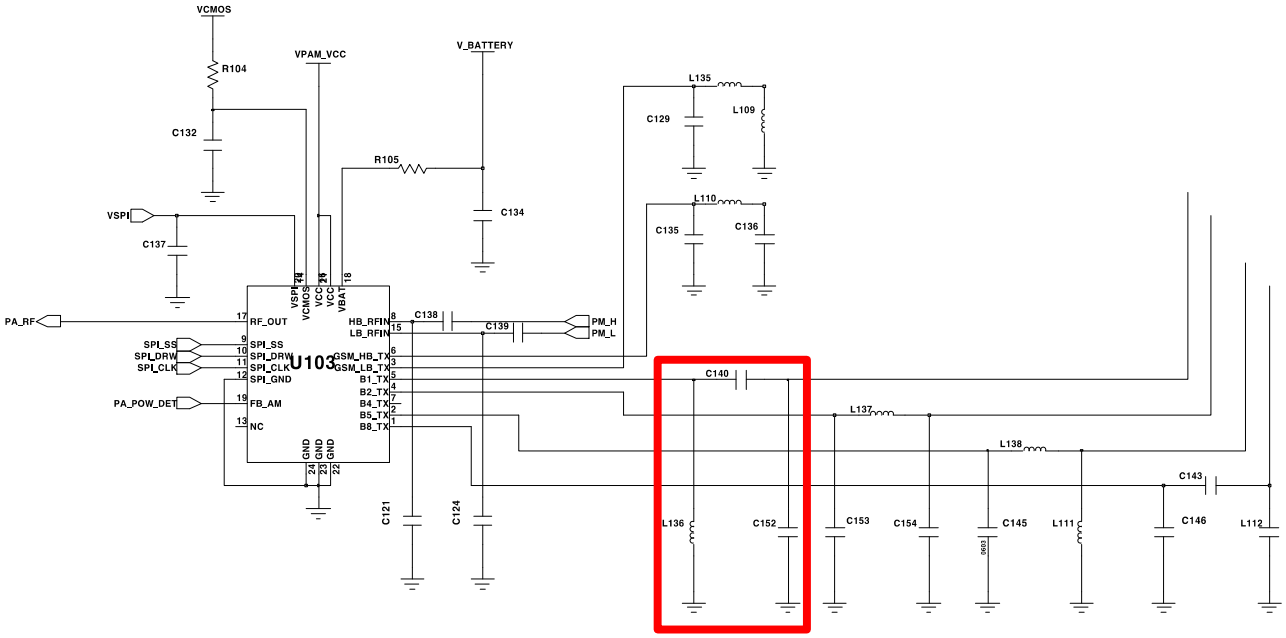

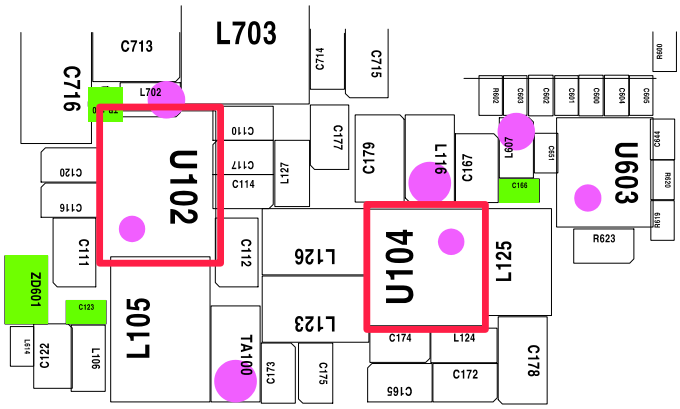

Confidential and proprietary-the contents in this service guide subject to change without prior notice.
Distribution, transmission, or infringement of any content or data from this document without Samsung's written authorization is strictly prohibited.

8-3-23.WCDMA BAND2 发射器

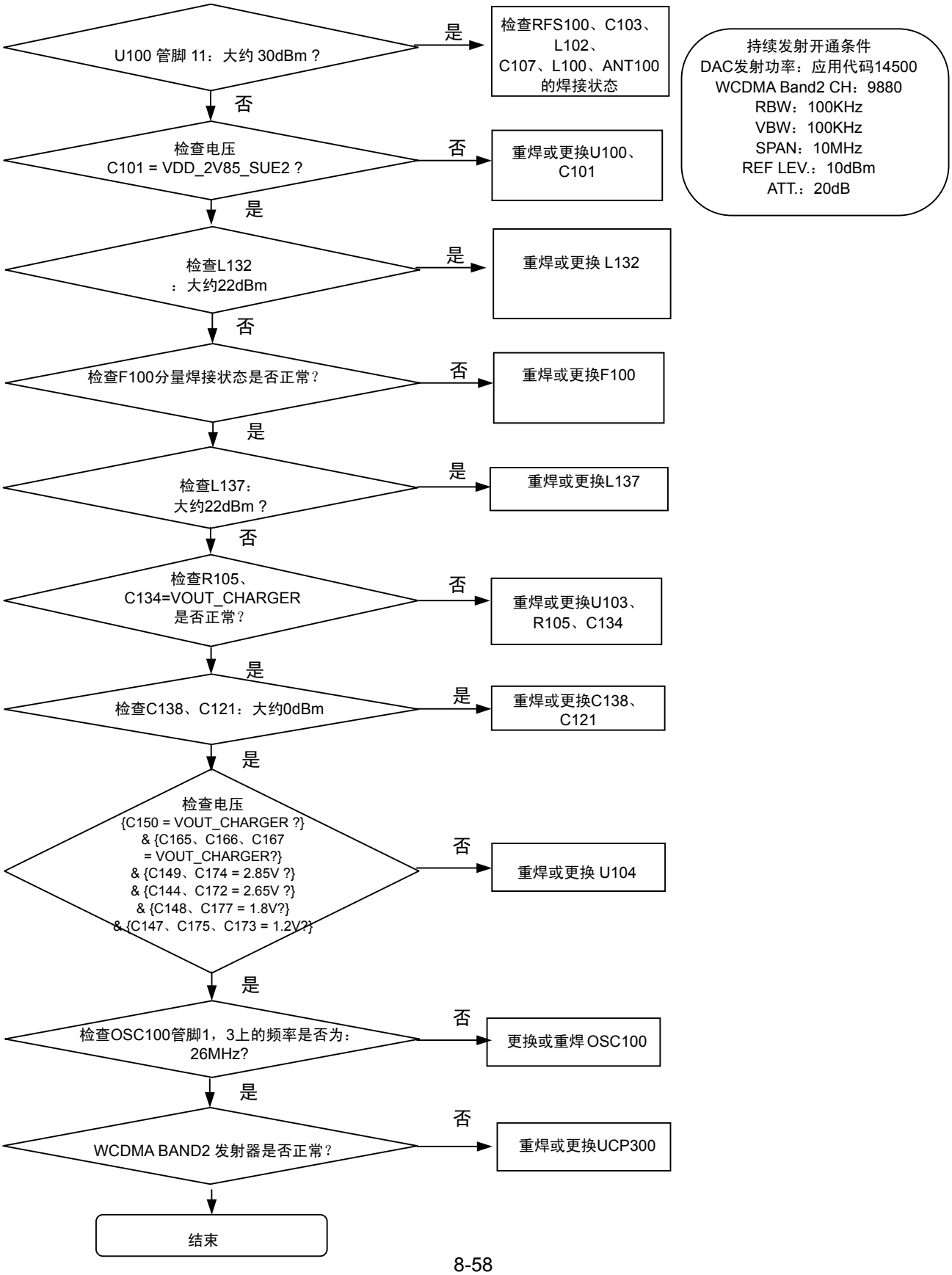

保密和所有权-本维修手册内容的变更恕不另行通知。
未经三星书面授权而发布，传送，或违背本文件中的任何内容或数据是严格禁止的。

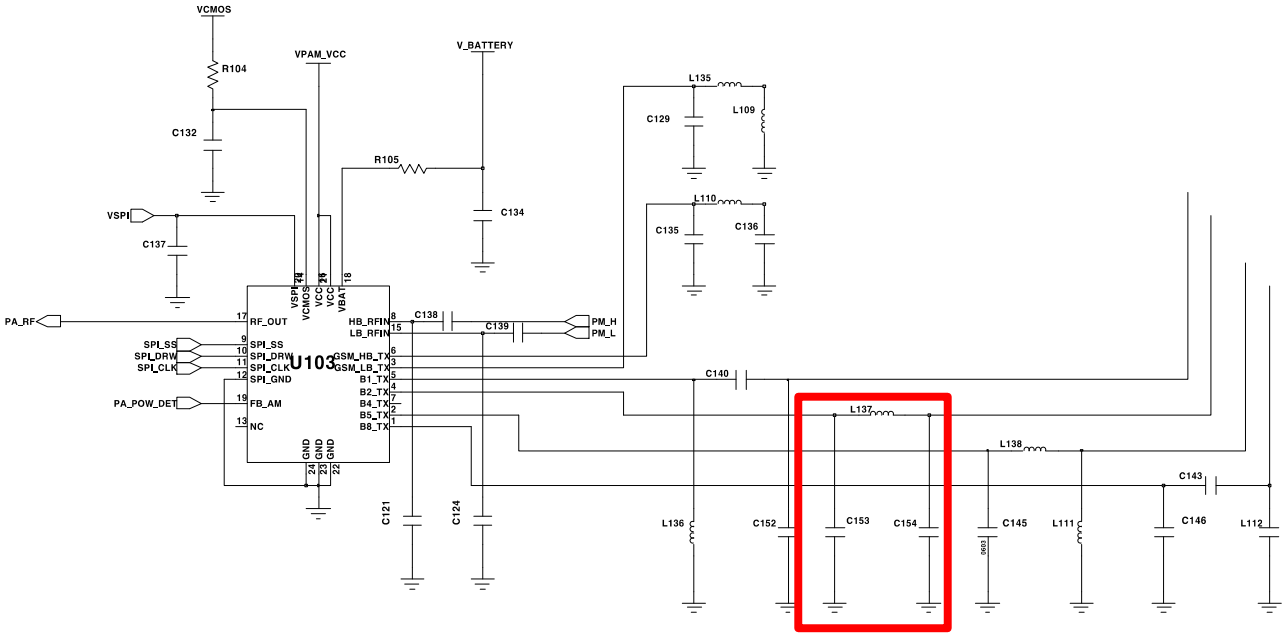

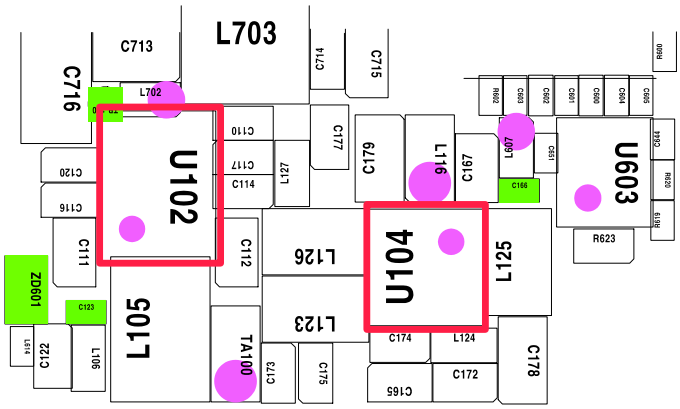

Confidential and proprietary-the contents in this service guide subject to change without prior notice.
Distribution, transmission, or infringement of any content or data from this document without Samsung's written authorization is strictly prohibited.

8-3-24.WCDMA BAND5 发射器

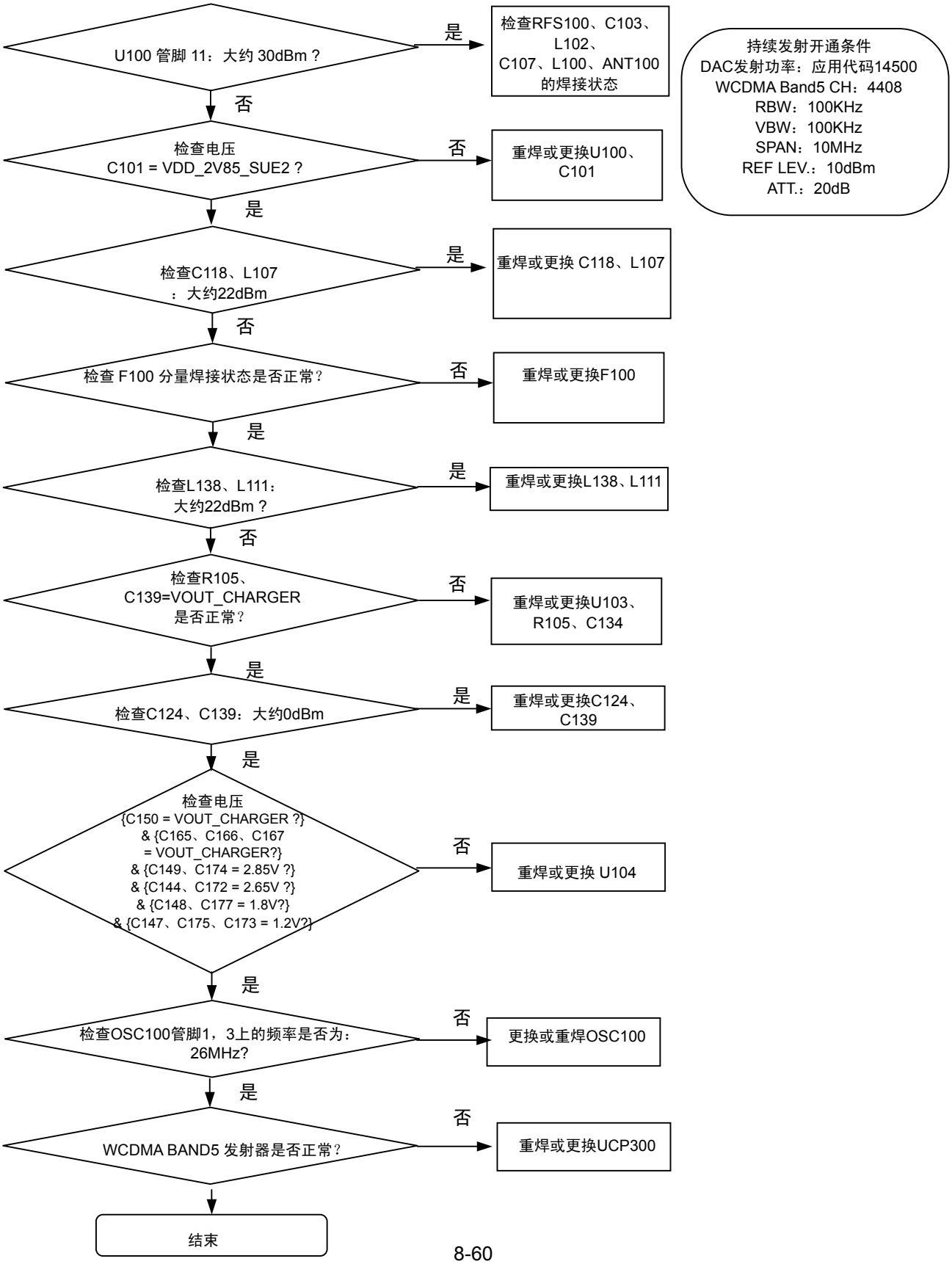

保密和所有权-本维修手册内容的变更恕不另行通知。
未经三星书面授权而发布，传送，或违背本文件中的任何内容或数据是严格禁止的。

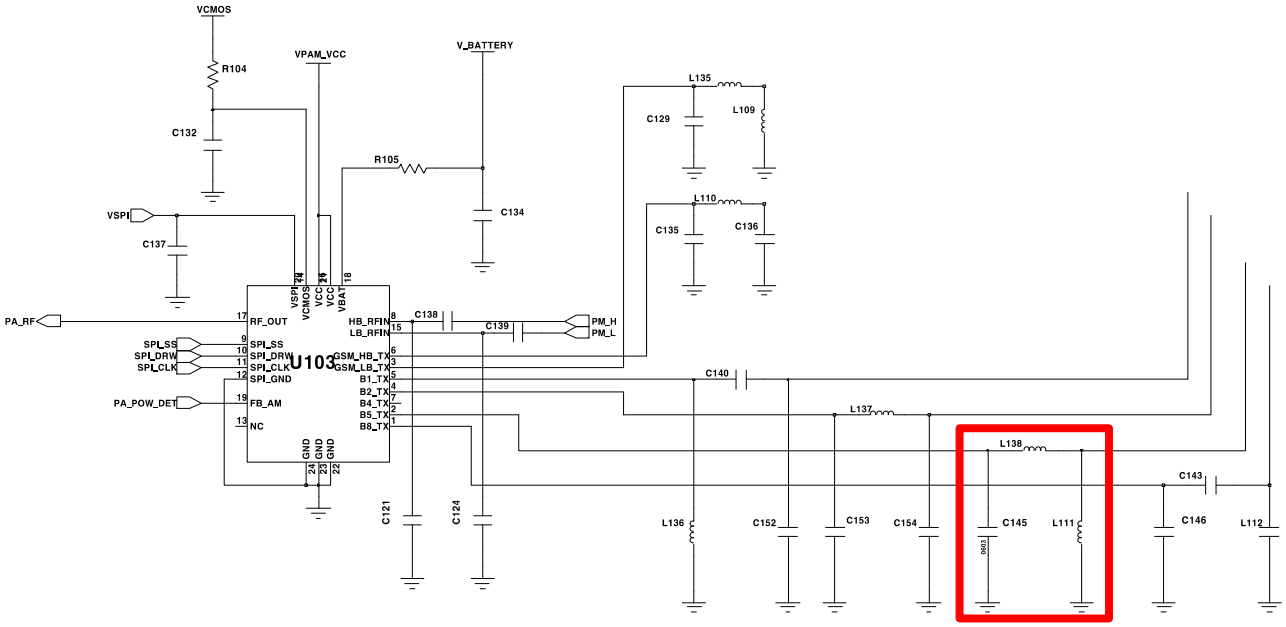

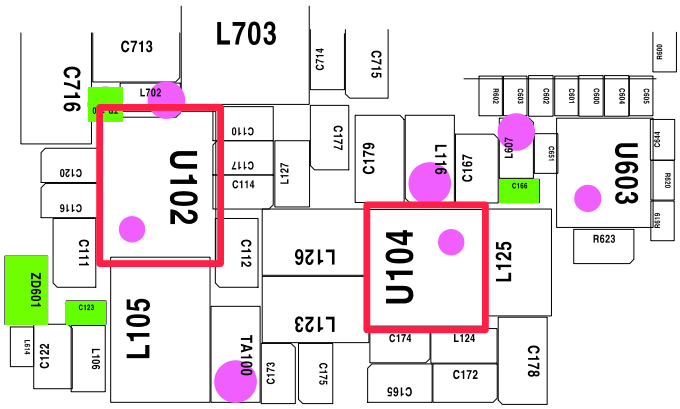

Confidential and proprietary-the contents in this service guide subject to change without prior notice.
Distribution, transmission, or infringement of any content or data from this document without Samsung's written authorization is strictly prohibited.

8-3-25.WCDMA BAND8 发射器

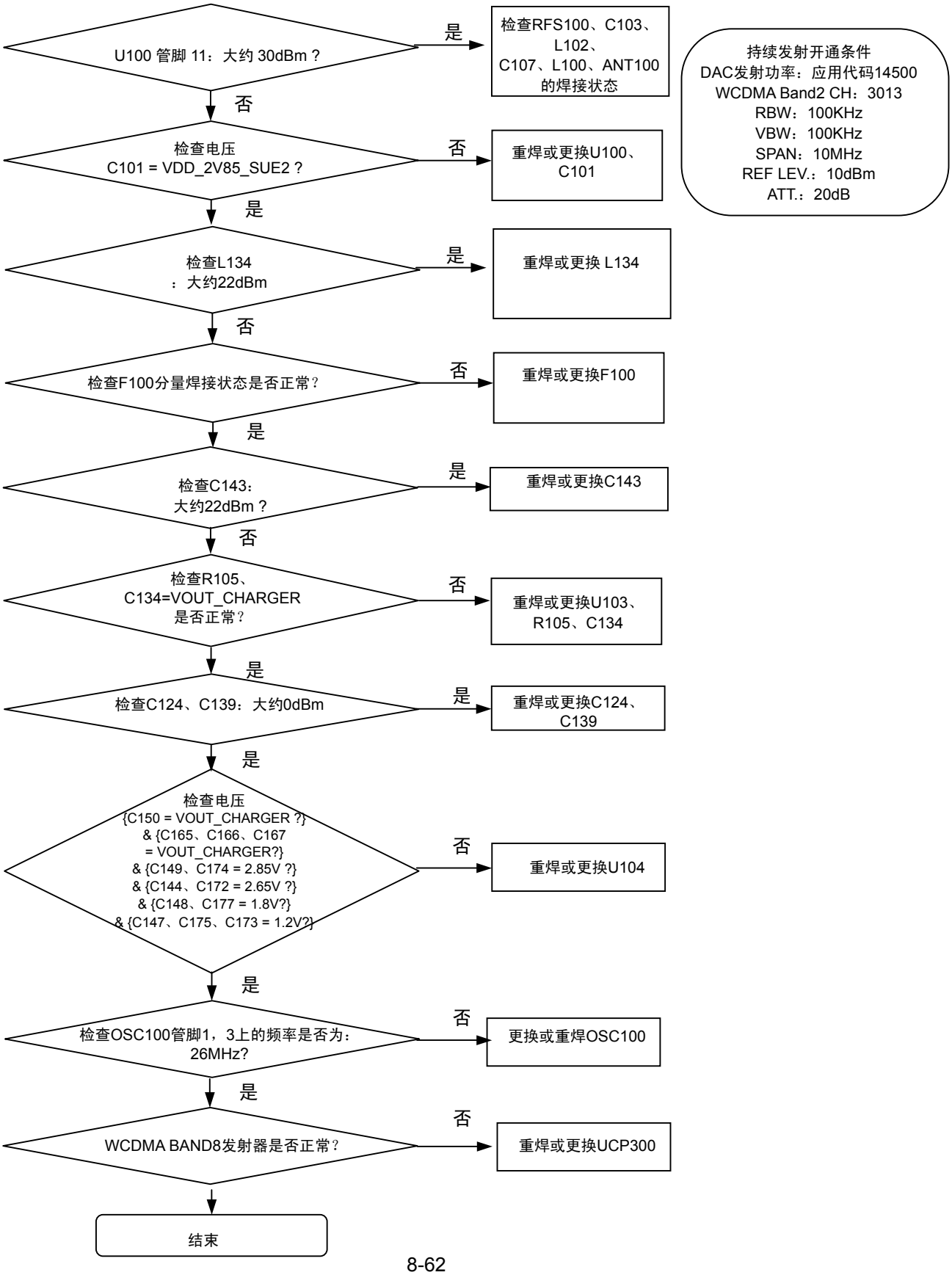

保密和所有权-本维修手册内容的变更恕不另行通知。
未经三星书面授权而发布，传送，或违背本文件中的任何内容或数据是严格禁止的。

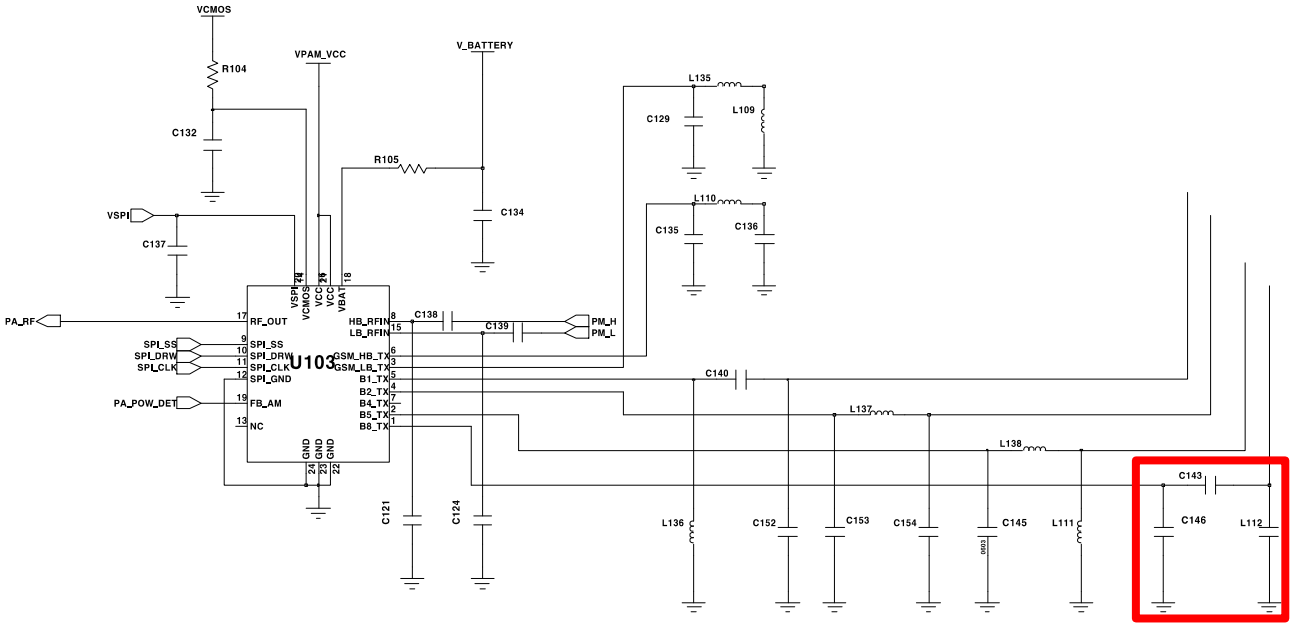

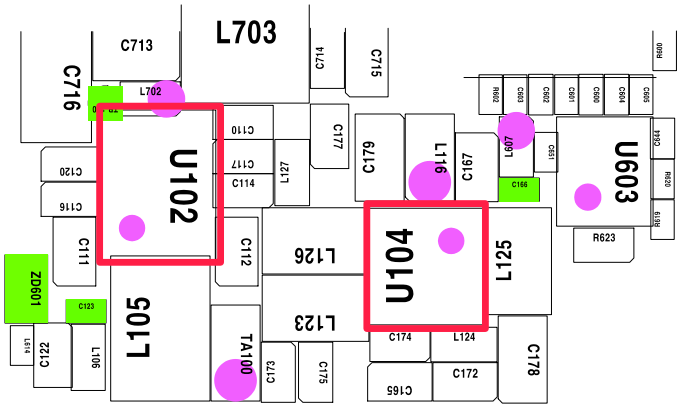

Confidential and proprietary-the contents in this service guide subject to change without prior notice.
Distribution, transmission, or infringement of any content or data from this document without Samsung's written authorization is strictly prohibited.

8-2-26.MHL

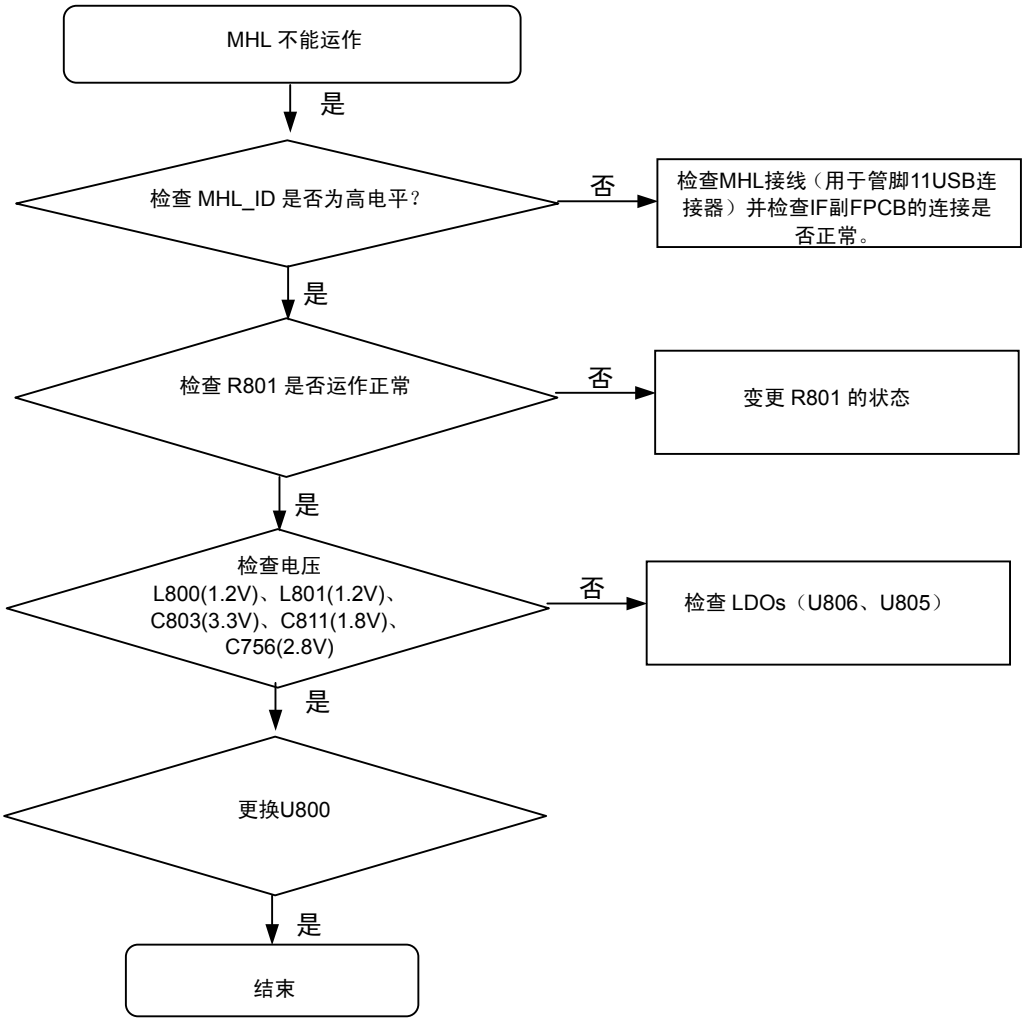

保密和所有权-本维修手册内容的变更恕不另行通知。
未经三星书面授权而发布，传送，或违背本文件中的任何内容或数据是严格禁止的。

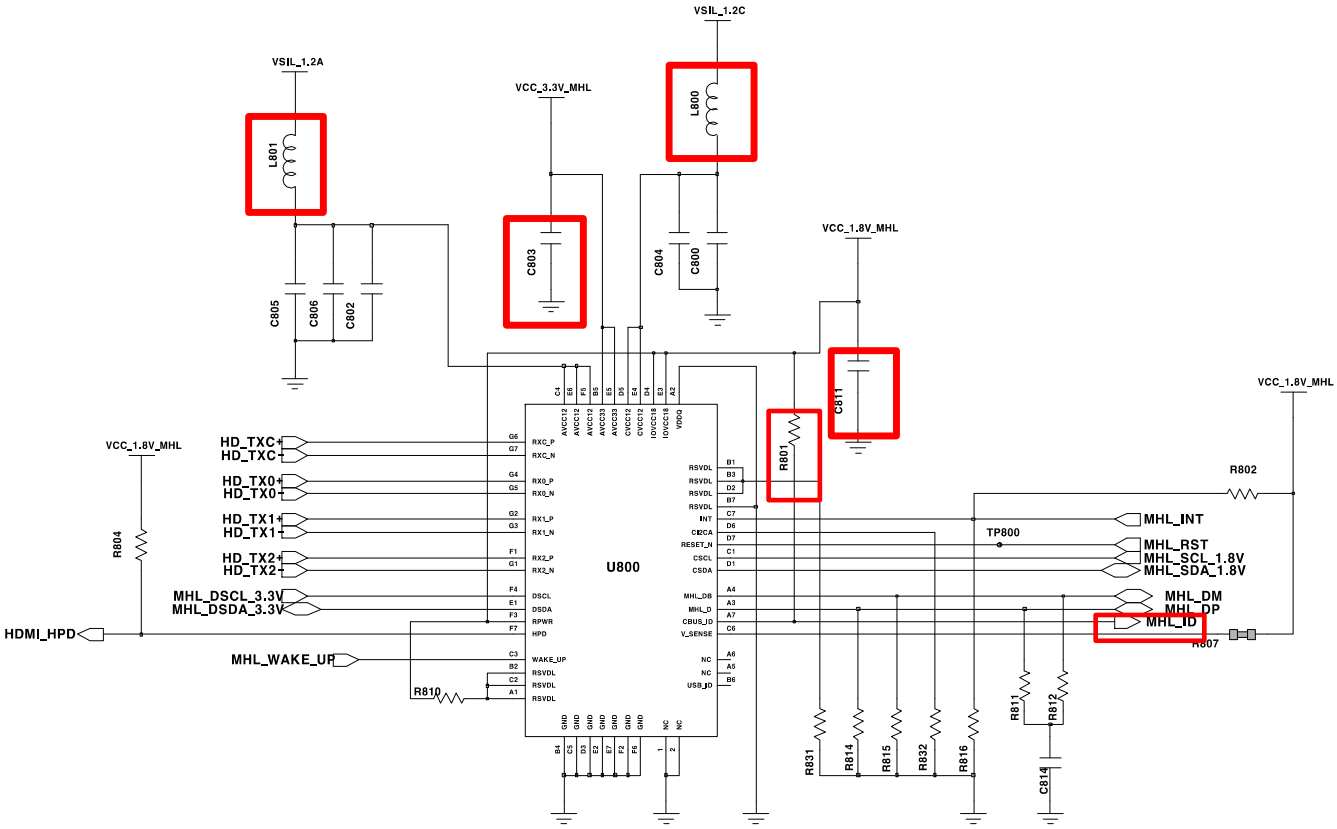

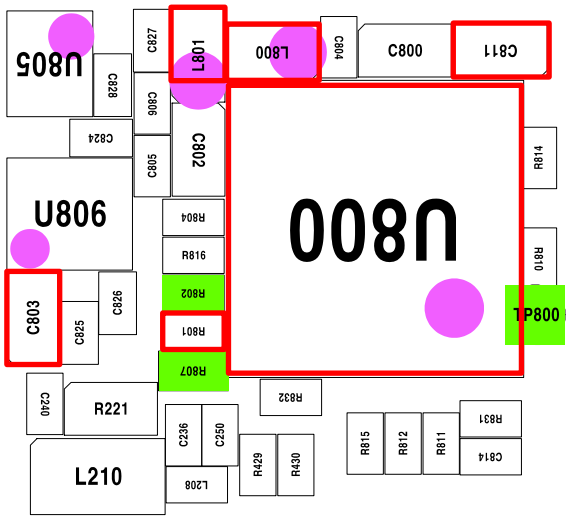

Confidential and proprietary-the contents in this service guide subject to change without prior notice.
Distribution, transmission, or infringement of any content or data from this document without Samsung's written authorization is strictly prohibited.

8-3-27.OTG

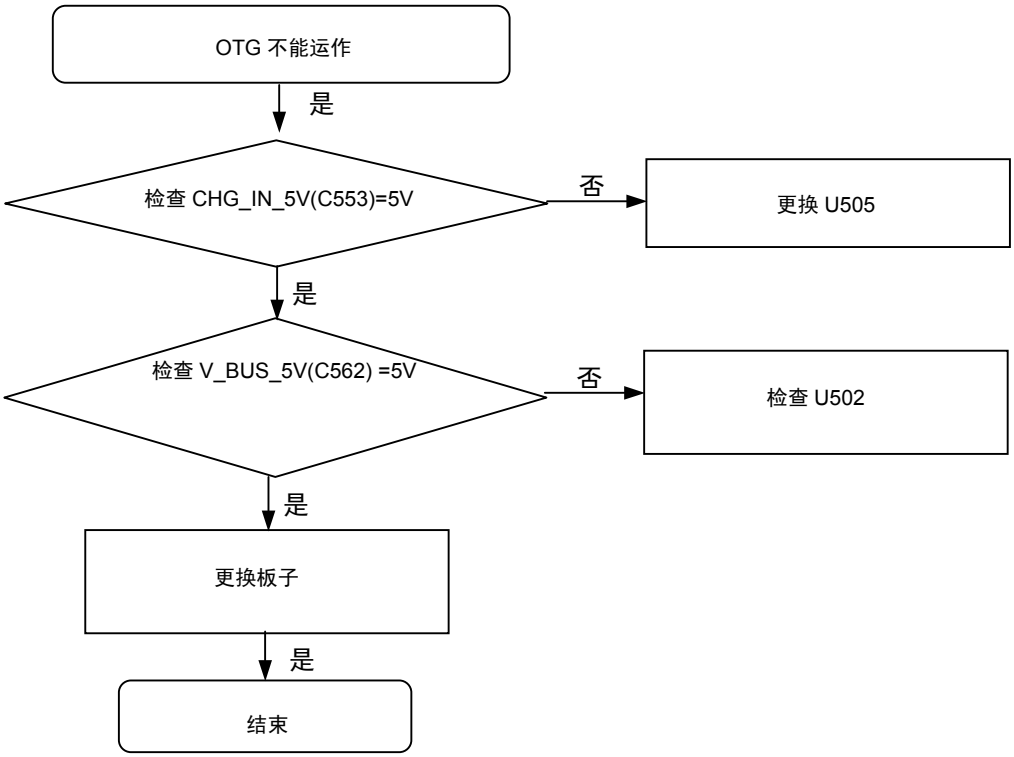

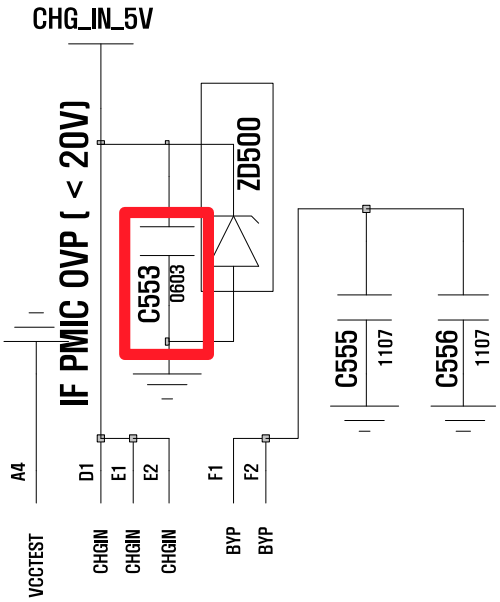

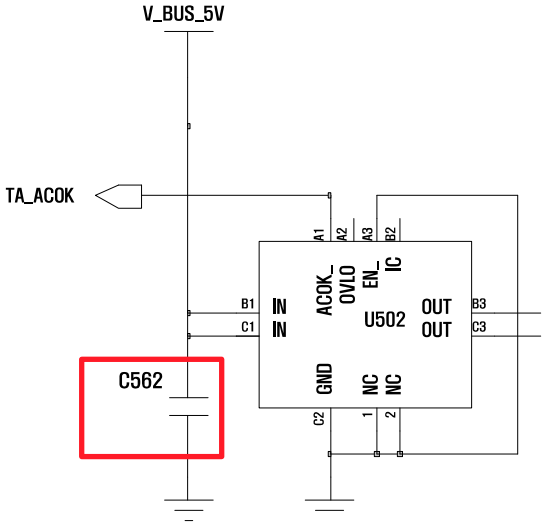

保密和所有权-本维修手册内容的变更恕不另行通知。
未经三星书面授权而发布，传送，或违背本文件中的任何内容或数据是严格禁止的。

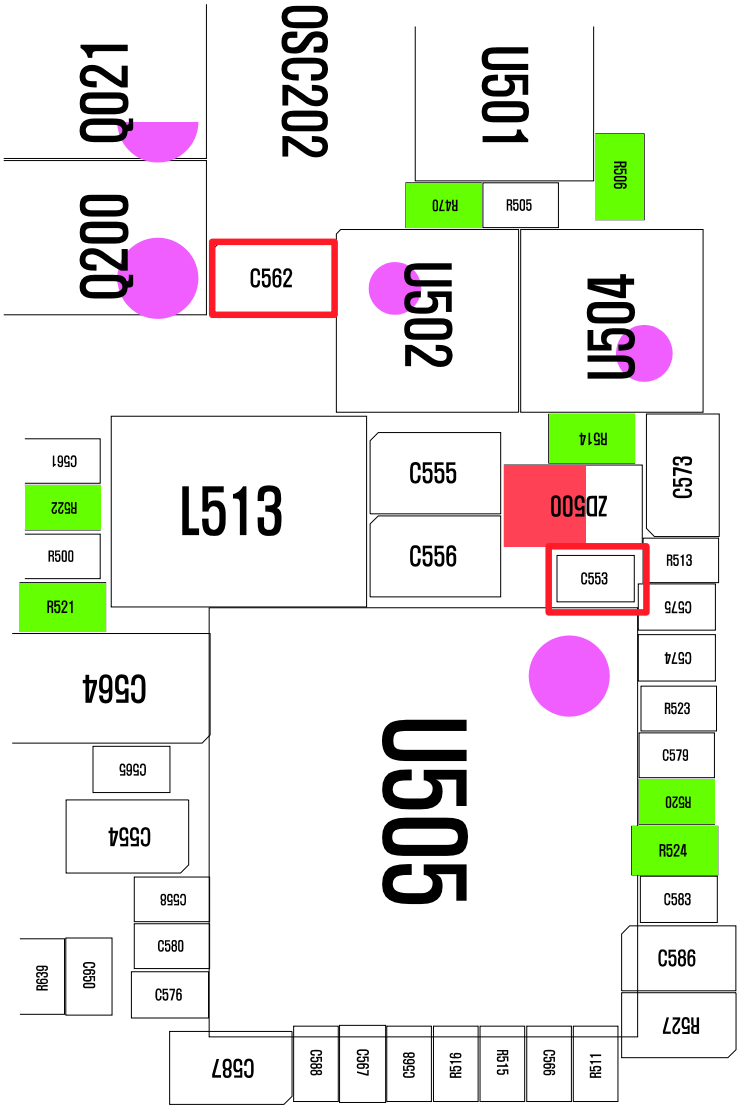

Confidential and proprietary-the contents in this service guide subject to change without prior notice.
Distribution, transmission, or infringement of any content or data from this document without Samsung's written authorization is strictly prohibited.